Swami Keshvanand Institute of Technology Management and Gramothan

Department of Mechanical Engineering

NOTICE

Pre - GATE Test

Date: 23/01/2020

All the final year students are informed that Engineers Academy, A premier institute for preparation of GATE, would be conducting Pre - GATE test on 24/01/2020. The pattern of the paper would be same as that of GATE. It is a great opportunity for you to judge your preparation. The interested students may take the examination.

Venue: Meghnad Saha seminar hall.

Timings: 12:30 – 3:30.

23/01/2020

Suresh Choudhary
(Gate Coordinator)

Copy to:-

1. Director
2. Director Academics
3. Registrar
4. Principal
5. Head (PAQIC)
6. Departmental notice board
7. Concerned faculty members
8. Notice file

Swami Keshvanand Institute of Technology, Management & Gramothan

Department of Mechanical Engineering

Date: 20/10/2018

NOTICE

All VII sem. students who have filled the GATE form-2019, need to appear in online ***Pre GATE TEST-2019*** organised by Mechanical Engineering Department. It is mandatory to all the above students to appear in online test. The test is being scheduled on ***27/10/2018 (Saturday)*** from 11:30 AM to 2:30 PM at IAI lab (IV floor, Main block) and CAD lab- I & II (ME Deptt.).

Syllabus: ***GATE syllabus.***

20-10-2018

22-10-2018

Dr. N. C. Bhandari
HOD,
Department of Mechanical Engg.

Organised Pre GATE Test-2019

Department of Mechanical Engineering conducted the ***Pre GATE test-2019*** for the final/pre final year students of Mechanical Engineering Department. Total three tests each of 3 hours duration were taken, out of them two tests were conducted online on date 27-10-2018 & 23-01-2019 by us, and third one test was conducted offline on 09-01-2019 by outside agency. The tests were Co-ordinated by Mr. Chandan Kumar, Assistant professor (ME) under the supervision of Dr. N.C. Bhandari, HOD (ME). Mr. Ajay Dhanopia and Mr. Suresh Choudhary also helped in this. Good number of students from final/pre final year appeared in these test. Students took keen interest and effort made by the department was appreciated.

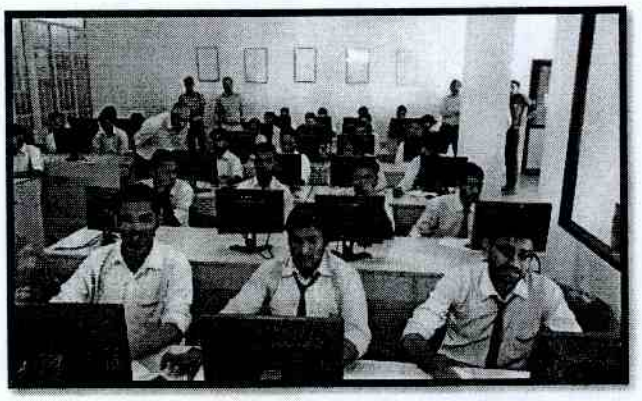

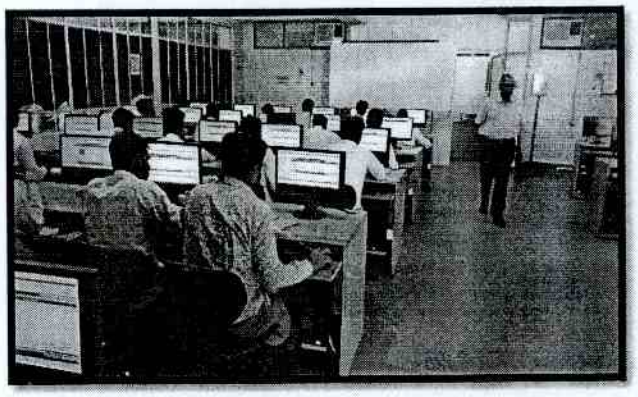

26-03-2019

Result of Pre GATE Test online held on 27/10/2018

S. No.	Roll No.	Name	Marks (100)
1	15ESKME003	ABHISHEK PALIWAL	28
2	15ESKME004	ABHISHEK TINKER	30
3	15ESKME009	AJAY TAWANIA	39
4	15ESKME010	AKANSH KOTHARI	43
5	15ESKME015	AMAN BAKOLIYA	21.75
6	15ESKME017	AMIT AGRAWAL	28
7	15ESKME018	ANAY MATHUR	25
8	15ESKME020	ANKIT SAIN	29
9	15ESKME021	ANKUR SHARMA	30
10	15ESKME022	ANOP MUNDEL	43.75
11	15ESKME023	ARENDRA SINGH	13
12	15ESKME024	ARJUN PATIDAR	23
13	15ESKME029	ASHWANI GUPTA	26.5
14	15ESKME031	AVINASH KUMAR	7
15	15ESKME035	BHANU PRATAP SINGH	18.75
16	15ESKME036	BHUVNESH CHAND AGRAWAL	22
17	15ESKME037	CHINMAY CHOURDIA	29.75
18	15ESKME039	DEEPAK FAUJDAR	29.5
19	15ESKME041	DEEPAK NOGIA	22.25
20	15ESKME042	DEV VRAT GOSWAMI	26.5
21	15ESKME043	DEVANSH DIXIT	52
22	15ESKME044	DEVENDRA KUMAR	29
23	15ESKME045	DEVESH MAHESHWARI	15
24	15ESKME047	DIKSHANT KHEMANI	32
25	15ESKME049	DINKAL SUMAN	25
26	15ESKME051	DIVYA JAIN	34.75
27	15ESKME052	DUSHYANT KARADIA	39
28	15ESKME054	GANESH PATEL	49.75
29	15ESKME055	GAURAV DADHICH	50.75
30	15ESKME058	GAURAV SHARMA	43
31	15ESKME059	GOPAL LAL KURI	17
32	15ESKME061	GOURAV SAINI	39
33	15ESKME065	HARSHIT SONI	28
34	15ESKME066	HARSHIT TIWARI	31
35	15ESKME077	JAINAM JAIN	45
36	15ESKME078	JASWANT SINGH RAWAT	30
37	15ESKME092	MANISH KUMAR KUMAWAT	30
38	15ESKME096	MANOJ KUMAR BAIRWA	20
39	15ESKME098	MAYANK AGGARWAL	51
40	15ESKME099	MAYANK JAIN	31
41	15ESKME103	MD IMRAN	31
42	15ESKME109	MRINAL MATHUR	39.5
43	15ESKME115	NIKHIL KUMAR JAIN	34
44	15ESKME116	NITESH KUMAR GURJAR	16
45	15ESKME120	OJJ PRATAP VERMA	10.75
46	15ESKME121	PANKAJ SAIN	20.75
47	15ESKME125	PIYUSH AGARWAL	23
48	15ESKME129	PRAMESHWAR LAL PRAJAPAT	14.25
49	15ESKME131	PRATEEK SHARMA	16.75
50	15ESKME133	PRIYANSHU KHANDELWAL	27
51	15ESKME142	RAJESH KUMAR	21
52	15ESKME148	ROHIT MALVIYA	27.75
53	15ESKME149	ROUNAK DHATTERWAL	21
54	15ESKME150	ROUNAK NUWAL	20.75
55	15ESKME162	SHREYANSH GOSWAMI	30
56	15ESKME163	SHUBHAM ARORA	39
57	15ESKME165	SHUBHAM PRADHAN	11
58	15ESKME169	SHUBHAM TANWAR	36
59	15ESKME172	SIDDARTH SINGH BISHT	29
60	15ESKME173	SOURABH SHARMA	33.75
61	15ESKME175	SURESH KUMAR NAGARWAL	24.75

62	15ESKME177	TARUN JAIN	32
63	15ESKME178	UTKARSH SHAHU	28.75
64	15ESKME180	VIKAS GAUR	30.5
65	15ESKME182	VISHAL KUMAR SONI	22
66	15ESKME183	VISHNU CHEJARA	38
67	15ESKME184	VIVEK JANGID	22
68	15ESKME185	YASH KUMAR	28
69	15ESKME300	VISHAL SHARMA SHARMA	28
70	15ESKME700	AASHISH KUMAR	11
71	15ESKME703	ABHISHEK SAINI	12
72	15ESKME707	AKHILESH KUMAR	0
73	15ESKME709	ANKIT KUMAR RAO	21
74	15ESKME714	ASHUTOSH SHUKLA	27
75	15ESKME715	BHAV MATHUR	40
76	15ESKME717	CHIRAG PARIK	17
77	15ESKME719	DAKSH GUPTA	27
78	15ESKME725	JAYDEEP KHAMESARA	20
79	15ESKME726	KAMLESH KUMAR	38
80	15ESKME727	KAPIL JETAWAT	41
81	15ESKME728	LOKENDRA SINGH GOUR	27
82	15ESKME730	MANISH KUMAWAT	38
83	15ESKME731	MANOJ KUMAR	27
84	15ESKME732	MD FAHAD IQUBAL	31
85	15ESKME734	MOHAN RAM JAT	12
86	15ESKME736	MUDIT SHARMA	27
87	15ESKME740	PRADHUMN MAHESHWARI	21.75
88	15ESKME750	RISHABH SHARMA	22.25
89	15ESKME752	SAMPAT SINGH RAWAT	32
90	15ESKME753	SHEKHAR SWAMI	32
91	15ESKME351	MIHIR VIJAYVARGIYA	38.25
92	15ESKME350	MUZAMMIL PADIYAR	39

Swami Keshvand Institute of Technology, Jaipur
Department of Mechanical Engineering
GATE Preliminary Online Test 2019
Attendance Sheet 27-10-2018

S. N.	University Roll No.	Name of students	Semester	Section	Signature	Signature
1	15ESKME005	Adarsh Goyal	VII	A	Adarsh	
2	15ESKME009	Ajay Tawania	VII	A	Ajay Tawania	Ajay Tawania
3	15ESKME015	Aman Bakoliya	VII	A	Amay	Amay
4	15ESKME020	Ankit Sain	VII	A	Ankit	Ankit
5	15ESKME022	Anop Mundel	VII	A	Anop	Anop
6	15ESKME024	Arjun Patidar	VII	A	Arjun	Arjun
7	15ESKME029	Ashwani Gupta Alok compy	VII	A		
8	14ESKME024	Ayush Tak	VII	A	Ayush Tak	Ayush Tak
9	15ESKME035	Bhanu Pratap Singh	VII	A	Bhanu Pratap	Bhanu Pratap
10	15ESKME037	Chinmay Chourdia	VII	A	Chourdia	Chourdia
11	15ESKME041	Deepak Nogia	VII	A	Deepak Nogia	Deepak Nogia
12	15ESKME043	Devansh Dixit	VII	A	Devansh Dixit	Devansh Dixit
13	15ESKME044	Devendra Kumar	VII	A	Deri	Deri
14	15ESKME046	Dhiraj Kumar Mishra	VII	A	Dhiraj	
15	15ESKME047	Dikshant Khemani	VII	A	Dikshant	Dikshant
16	15ESKME051	Divya Jain	VII	A	Divya	Divya
17	15ESKME052	Dushyant Karadia	VII	A	Dushyant	Dushyant
18	15ESKME054	Ganesh Patel	VII	A	Ganesh	Ganesh
19	15ESKME058	Gaurav Sharma	VII	A	Gaurav	Gaurav
20	15ESKME059	Gopal lal Kuri	VII	A	Gopal	Gopal
21	15ESKME055	Gaurav Dadhich	VII	A	Gaurav	Gaurav
22	15ESKME061	Gourav Saini	VII	A	Gourav	Gourav
23	15ESKME062	Govind Ram Kumawat	VII	A	Govind	
24	15ESKME066	Harshit Tiwari	VII	A	Harshit Tiwari	Harshit Tiwari
25	15ESKME075	Jai prakash Saini	VII	A	Jai	
26	15ESKME078	Jaswant Singh Rawat	VII	A	Jaswant	Jaswant
27	15ESKME084	Keshav Mot	VII	A	Kes	
28	15ESKME087	Kuldeep Singh Rathor	VII	A	Kuldeep	
29	15ESKME090	Lalit Kumar	VII	A	Lalit	
30	15ESKME092	Manish Kumar Kumawat	VII	A	Manish Kum	
31	~~15ESKME094~~	~~Manish Kumawat~~	VII	A		
32	15ESKME098	Mayank Aggarwal	VII	A	Mayank	Mayank

S. N.	University Roll No.	Name of students	Semester	Section	Signature	Signature
33	15ESKME103	Md Imran	VII	A	Md. Imran	Md. Imran
34	15ESKME351	Mihir Vijayvargiya	VII	A	Mihir	Mihir
35	15ESKME115	Nikhil Kumar Jain	VII	A		
36	15ESKME116	Nitesh Kumar Gurjar	VII	A	Nitesh	Nitesh
37	15ESKME125	Piyush Agarwal	VII	A		
38	15ESKME129	Prameshwar Lal Prajapat	VII	A		
39	15ESKME137	Rahul Saini	VII	A	Not interested	
40	15ESKME142	Rajesh Kumar	VII	A	Rajesh	Rajesh
41	15ESKME145	Rishabh Sain	VII	A	Not interested	
42	15ESKME750	Rishabh Sharma	VII	A		
43	15ESKME752	Sampat Singh Rawat	VII	A	Sampat Singh	
44	15ESKME154	Sandeep Singh	VII	A	Not Interested	
45	15ESKME158	Shailendra Saraswat	VII	A	Not interested	
46	15ESKME161	Shiwani	VII	A	Shiwani	
47	15ESKME175	Suresh Kumar Nagarwal	VII	A	Suresh	Suresh
48	15ESKME177	Tarun Jain	VII	A	Tarun Jain	Tarun Jain
49	15ESKME180	Vikas Gaur	VII	A	Vikas	Vikas
50	15ESKME182	Vishal Kumar Soni	VII	A	Vishal	Vishal Soni
51	15ESKME183	Vishnu Chejara	VII	A	Vishnu	Vishnu
52	15ESKME188	Yuganshu Sharma	VII	A		
53	15ESKME003	Abhishek Paliwal	VII	B	Abhishek	Abhishek
54	15ESKME004	Abhishek Tinker	VII	B		
55	15ESKME010	Akansh Kothari	VII	B	Akansh	
56	15ESKME018	Anay Mathur Alok	VII	B	Anay	Anay
57	15ESKME023	Arendra Singh	VII	B	Arendra	Arendra
58	15ESKME036	Bhuvnesh Chand Agrawal	VII	B		
59	15ESKME045	Devesh Maheshwari	VII	B	Devesh	Devesh
60	15ESKME042	Dev vrat Goswami	VII	B	Devvrat	Devvrat
61	15ESKME049	Dinkal suman	VII	B	Dinkal	Dinkal
62	15ESKME065	Harshit Soni	VII	B	हर्षित सोनी	हर्षित सोनी
63	15ESKME067	Himanshu Jain	VII	B	Himanshu	
64	15ESKME069	Hitanshu Bhardwaj	VII	B	Hitanshu	
65	15ESKME072	Indrabhushan Sharma	VII	B	Indrabhushan	
66	15ESKME073	Indrajeet Singh Jadon	VII	B	Indrajeet	
67	15ESKME079	Jayant Jain	VII	B	Jayant Jain	
68	15ESKME081	Jitender Kumar Yadav	VII	B	Jitendar	

S. N.	University Roll No.	Name of students	Semester	Section	Signature	Signature
69	15ESKME086	Kuldeep Singh	VII	B		
70	15ESKME091	Mahesh Suwalka	VII	B		
71	15ESKME096	Manoj Kumar Bairwa	VII	B		
72	15ESKME097	Manu Saxena	VII	B		
73	15ESKME099	Mayank Jain	VII	B		
74	15ESKME107	Mohit Gupta	VII	B		
75	15ESKME094	Manish Kumawat	VII	C		
76	15ESKME732	MD Fahad Iqubal	VII	C		
77	15ESKME109	Mrinal Mathur	VII	C		
78	16ESKME203	Nedaaur Rehman	VII	C		
79	15ESKME120	Ojj Pratap Verma	VII	C		
80	15ESKME121	Pankaj Sain	VII	C		
81	16ESKME204	Piyush Jangid	VII	C		
82	15ESKME131	Prateek Sharma	VII	C		
83	15ESKME133	Priyanshu Khandelwal	VII	C		
84	15ESKME134	Pulkit Sharma	VII	C		
85	15ESKME135	Pulkit Soni	VII	C		
86	15ESKME141	Rajeev Sain Marothiya	VII	C		
87	15ESKME146	Rohit Bairwa	VII	C		
88	15ESKME148	Rohit Malviya	VII	C		
89	15ESKME150	Rounak Nuwal	VII	C		
90	15ESKME162	Shreyansh Goswami	VII	C		
91	15ESKME163	Shubham Arora	VII	C		
92	15ESKME164	Shubham Goyal	VII	C		
93	15ESKME165	Shubham Pradhan	VII	C		
94	15ESKME166	Shubham Saini	VII	C		
95	15ESKME168	Shubham Shrimal	VII	C		
96	15ESKME169	Shubham Tanwar	VII	C		
97	15ESKME172	Siddarth Singh Bisht	VII	C		
98	15ESKME173	Sourabh Sharma	VII	C		
99	16ESKME208	Sunil Kumawat Alok	VII	C		
100	15ESKME178	Utkarsh Shahu	VII	C		
101	15ESKME181	Vishad Tailor	VII	C		
102	15ESKME184	Vivek Jangid	VII	C		
103	15ESKME185	Yash Kumar	VII	C		
104	15ESKME186	Yogesh Mahawar	VII	C		

S. N.	University Roll No.	Name of students	Semester	Section	Signature	Signature
105	15ESKME700	Aashish Kumar	VII	S	Aashish Kumar	
106	15ESKME703	Abhishek Saini	VII	S	Abhishek	Abhishek
107	15ESKME709	Ankit Kumar Rao	VII	S		
108	15ESKME714	Ashutosh Shukla	VII	S		
109	15ESKME715	Bhav Mathur	VII	S	bhm.	bhm.
110	15ESKME719	Daksh Gupta	VII	S		
111	15ESKME725	Jaydeep Khamesara	VII	S	Jaydeep	Jaydeep
112	15ESKME726	Kamlesh Kumar	VII	S	Kamlesh Kumar	Kamlesh Kumar
113	15ESKME727	Kapil Jetawat Interview	VII	S	Kapil	Kapil
114	15ESKME730	Manish Kumawat	VII	S		
115	15ESKME731	Manoj Kumar	VII	S		
116	15ESKME733	Md Nadim Akhtar	VII	S		
117	15ESKME734	Mohan Ram Jat	VII	S		
118	15ESKME735	Mrityunjay Choubey	VII	S		
119	15ESKME736	Mudit Sharma	VII	S	Mudit	Mudit
120	15ESKME350	Muzammil Padiyar	VII	S	Muzammil	Muzammil
121	15ESKME740	Pradhumn Maheshwari	VII	S		
122	15ESKME747	Rajat Aatriwal	VII	S	Not interested	
123	15ESKME751	Sagar Kumar	VII	S	Sagar Kumar	
124	15ESKME160	Shehzad Raj	VII	S	Not interested	
125	15ESKME753	Shekhar Swami	VII	S	Shekhar	Shekhar
126	15ESKME754	Shivankur Sharma	VII	S		
127	15ESKME760	Vishvandra Singh	VII	S	Vishvandra	

15ESKME031 Aniruddh Kr. VII A. Aniruddh Kr. Aniruddh Kr.
15ESKME017 AMIT AGRAWAL VII B Amit. Amit.
~~15ESKME010 Akash VII B Akash.~~
→ 15ESKME021 Ankur Sharma VII B Ankur Ankur
→ Chirag Parik 15ESKME717 VII S Chirag Chirag
AKHILESH KUMAR 15ESKME700 VII S Akhilesh Kumar. Akhilesh Kumar
VISHAL SHARMA 15ESKME300 VII A Vishal Vishal
→ Rounak Dhatterwal 15ESKME149 VII C Rounak Rounak
Jainam Jain 15ESKME077 VII B Jainam Jainam Jain
Deepak Faujdar 15ESKME039 VII B Deepak Deepak
Sampat Singh Rawat 15ESKME752 Sampat

S.N.	NAME OF STUDENTS	SEMESTER	SECTION	Location	Signature
81	Piyush Aarwal	VII	A	Civil Compt. Lab	
82	Piyush Jangid	VII	C	Civil Compt. Lab	
83	Pradhuman Maheshwari	VII	S	Civil Compt. Lab	
84	Prameshwar Lal Prajapat	VII	A	Civil Compt. Lab	
85	Prateek Sharma	VII	C	Civil Compt. Lab	
86	Priyanshu Khandelwal	VII	C	Civil Compt. Lab	PRIYANSHU
87	Pulkit Sharma	VII	C	Civil Compt. Lab	
88	Pulkit Soni	VII	C	Civil Compt. Lab	
89	Rahul Saini	VII	A	Civil Compt. Lab	
90	Rajat Atriwaal	VII	S	Civil Compt. Lab	
91	Rajeev Sain Marothiya	VII	C	Civil Compt. Lab	
92	Rajesh Kumar	VII	A	Civil Compt. Lab	Rajesh
93	Rishabh Sain	VII	A	Civil Compt. Lab	
94	Rishabh Sharma	VII	A	Civil Compt. Lab	
95	Rohit Bairwa	VII	C	Civil Compt. Lab	
96	Rohit Malviya	VII	C	Civil Compt. Lab	
97	Rounak Nuwai	VII	C	Civil Compt. Lab	Rounak
98	Sagar Kumar	VII	S	Civil Compt. Lab	
99	Sampat Singh Rawat	VII	A	Civil Compt. Lab	Sampat Singh Rawat
100	Sandeep Singh	VII	A	Civil Compt. Lab	
101	Shailendra Saraswat	VII	A	Civil Compt. Lab	
102	Shehzad Raj	VII	S	Civil Compt. Lab	
103	Shekhar Swami	VII	S	Civil Compt. Lab	
104	Shivankur Sharma	VII	S	Civil Compt. Lab	
105	Shiwani	VII	A	Civil Compt. Lab	
106	Shreyansh Goswami	VII	C	Civil Compt. Lab	Shreyansh
107	Shubham Arora	VII	C	Civil Compt. Lab	
108	Shubham Goyal	VII	C	Civil Compt. Lab	
109	Shubham Pradhan	VII	C	Civil Compt. Lab	
110	Shubham Saini	VII	C	Civil Compt. Lab	
111	Shubham Shrimal	VII	C	Civil Compt. Lab	
112	Shubham Tanwar	VII	C	Civil Compt. Lab	
113	Siddharth Singh Bisht	VII	C	Civil Compt. Lab	

S.N.	NAME OF STUDENTS	SEMESTER	SECTION	Location	Signature
114	Sourabh Sharma	VII	C	Civil Compt. Lab	Sourabh
115	Sunil Kumawat	VII	C	Civil Compt. Lab	सुनील कुमावत
116	Suresh Kumar Nagarwal	VII	A	Civil Compt. Lab	Suresh
117	Tarun Jain	VII	A	Civil Compt. Lab	Tarun Jain
118	Utkarsh Sahu	VII	C	Civil Compt. Lab	Utkarsh Sahu
119	Vikas Gaur	VII	A	Civil Compt. Lab	Vikas
120	Vishad Tailor	VII	C	Civil Compt. Lab	Vishad
121	Vishal Kumar Soni	VII	A	Civil Compt. Lab	Vishal Soni
122	Vishal Sharma	VII	A	Civil Compt. Lab	Vishal
123	Vishnu Chejara	VII	A	Civil Compt. Lab	Vishnu
124	Vishvendra Singh	VII	S	Civil Compt. Lab	
125	Vivek Jangid	VII	C	Civil Compt. Lab	Vivek Jangid
126	Yash Kumar	VII	C	Civil Compt. Lab	Yash Kumar
127	Yogesh Mahwar	VII	C	Civil Compt. Lab	
128	Yuganshu Sharma	VII	A	Civil Compt. Lab	

129 AKHILESH KUMAR VII S Civil Compt. LAB. Akhilesh kumar.

Swami Keshvanand Institute of Technology, Management & Gramothan, Jaipur

Department of Mechanical Engineering

Date: 12/01/2019

NOTICE

It is informed to all the students that Department of Mechanical Engineering is going to organise ***2nd Pre GATE TEST-2019***. It is mandatory to appear in this test for the VIII sem. students (who have filled the GATE form-2019) and VI sem. students (Section A). Any other student who would like to appear in this test is also welcomed. The details of the test are as

Date (Day): 23/01/2019 (Wednesday)

Time: 12:30 PM to 3:30 PM

Venue: IAI lab (IV floor, Main block) and CAD lab- I & II (ME Deptt.)

Syllabus: GATE syllabus.

12-01-19

Chandan Kumar,
Coordinator (Gate Test-2019),
Department of Mechanical Engineering

12-1-2019

HOD, ME

Swami Keshvanand Institute of Technology, Jaipur

Department of Mechanical Engineering

Pre GATE Test (Online)- 2019

Attendance List (VI Sem.)

23/01/2019

S.No.	Roll No.	Name of Student	Sign.	Sign.
1	16ESKME005	ABHISHEK SHARMA (M.K.S.)	Asharma	Sharma
2	16ESKME021	AMAN PANKAJ	Aman	Aman
3	16ESKME022	AMAN SINGHAL	Aman	Aman
4	16ESKME025	ANIKET RATHORE	Aniket	Aniket
5	16ESKME033	ARUN THAKURATHI		
6	16ESKME040	ASHWINI KUMAR JANGID	Ashwini	Ashwini
7	16ESKME049	DEEPAK SHARMA (A.K.S.)	[illegible]	[illegible]
8	16ESKME051	DEEPANSHU SAINI	[illegible]	[illegible]
9	16ESKME053	DEEPESH GUPTA	[illegible]	[illegible]
10	16ESKME063	GAURAV J BEDI		
11	16ESKME066	GHANISTH YADAV	Ghanisth	Ghanisth
12	16ESKME067	HARDIK MEHTA	Hardik	Hardik
13	16ESKME068	HARSH BARGOTA	Harsh	Harsh
14	16ESKME069	HARSH KUMAR VERMA	[illegible]	[illegible]
15	16ESKME073	HARSHIT TIWARI	Harshit	Harshit
16	16ESKME076	JAYESH CHHABRA	[illegible]	[illegible]
17	16ESKME077	JAYESH MALVIYA	Jayesh	Jayesh
18	16ESKME078	K VARDHRAJAN	Varath	Varath
19	16ESKME080	KAVITOSH SHARMA	Kkharma	Kkharma
20	16ESKME081	KULDEEP SINGH		
21	16ESKME082	KUNAL ADVANI	[illegible]	
22	16ESKME084	LAKSHYA KHANDELWAL	Lakshya	Lakshya
23	16ESKME087	LAVISH JAIN	Lavish	
24	16ESKME088	LOKESH KUMAR JAT		
25	16ESKME089	MAHIPAL CHOUDHARY	Mahipal	Mahipal
26	16ESKME091	MAYANK CHOUDHARY		
27	16ESKME092	MAYANK GUPTA	Mayank	
28	16ESKME104	MOHIT TIWARI	mohit	mohit
29	16ESKME106	MUDIT BHARDWAJ	Mudit	Mudit
30	16ESKME118	PAWAN SAINI	Pawan	Pawan
31	16ESKME126	PRASHANT GUPTA	Gupta	Gupta
32	16ESKME300	AAKASH SHARMA (EC to ME)	[illegible]	[illegible]
33	16ESKME301	GAURAV GUPTA (EC to ME)	[illegible]	[illegible]
34	16ESKME302	ABHISHEK PRADHAN (EE to ME)	[illegible]	[illegible]
35	16ESKME303	PULKIT JAIN (EE to ME)	Pulkit Jain	[illegible]
36	16ESKME127	PRATEEK CHOUDHARY	Prateek	Prateek
37	16ESKME131	PRITAM MANNA	[illegible]	[illegible]
38	16ESKME132	PRIYANSHU	Priyanshu	Priyanshu
39	16ESKME145	ROHIT SABDHANI		

40	16ESKME147	RONAK PANCHAL	RONAK	RONAK
41	16ESKME153	SANJEEV KUMAR	Sanjeev Kumar	Sanjeev Kumar
42	16ESKME156	SHIVANSH OGALE	Shivansh	
43	16ESKME158	SHUBHAM JAIN		
44	16ESKME172	TIRUPATI SINGH	Tirupati	
45	16ESKME176	VEERENDRA SINGH		
46	16ESKME177	VIJAY KUMAR SHARMA	Vijay	Vijay
47	16ESKME180	VIPIN MUNDRA	Vipin	Vipin
48	16ESKME184	YOGESH KUMAR		
49	16ESKME701	ABHISHEK GARG		
50	16ESKME703	ABIR BERA		
51	16ESKME705	AMAN GOYAL		
52	16ESKME706	AMAN SINHA		
53	16ESKME711	DEEPAK KUMAR KHANDELWAL		
54	16ESKME713	GOURAV BAHETI		
55	16ESKME714	HARSHIKESH KUMAR	Harshikesh Kumar	
56	16ESKME717	HEMANT SONI		
57	16ESKME719	HIMANSHU GUPTA		
58	16ESKME724	MAHIPAL YADAV	Mahipal	Mahipal
59	16ESKME725	MAYANK GUPTA		
60	16ESKME729	NIHAL TIWARI		
61	16ESKME738	RAVI KUMAR	Ravi Kumar	Ravi Kumar
62	16ESKME740	SACHIN SHARMA	Sachin Sharma	
63	16ESKME741	SACHIN YADAV		
64	16ESKME742	SATYAM KUMAR	Satyam	
65	16ESKME745	SHIVAM CHOUDHARY		
66	16ESKME747	SIDDHANT PACHOURI		
67	16ESKME750	SOURABH DUDANI		
68	16ESKME753	UTKARSH GAUR		
69	16ESKME756	YASH PANCHARIA		
70	16ESKME757	YASH PANDEY		
71	16ESKME001	AAKASH YADAV		
72	16ESKME002	ABHIJEET KUMAR		
73	16ESKME003	ABHIJEET SHARMA		
74	16ESKME004	ABHISHEK BISHNOI		
75	16ESKME006	ABHISHEK SHARMA (P.S.)		
76	16ESKME007	ABHISHEK SHARMA (S.S.S.)		
77	16ESKME008	ABHISHEK SHARMA (V.K.S.)		
78	16ESKME009	ADITYA KUMAR		
79	16ESKME010	AKASH AGARWAL		
80	16ESKME011	AKASH SINGHAL		
81	16ESKME012	AKHIL NAIR		
82	16ESKME013	AKRITI SONI	Akriti	Akriti
83	16ESKME014	AKSHAT GAUTAM		

Sachin Sharma

84	16ESKME015	AKSHAT RAJ RATNA		
85	16ESKME016	AKSHAY KUMAR SINGHAL		
86	16ESKME017	AKSHET BISHNOI		
87	16ESKME018	AMAN AGARWAL(K.C.A.)		
88	16ESKME019	AMAN AGARWAL (M.A.)		
89	16ESKME023	AMIT KUMAR		
90	16ESKME026	ANIMESH		
91	16ESKME027	ANIRUDH YOGI		
92	16ESKME028	ANITA SHARMA		
93	16ESKME029	ANKIT MISHRA		
94	16ESKME030	ANKIT SHARMA		
95	16ESKME031	ANKUR SHARMA		
96	16ESKME032	APOORVE MISHRA		
97	16ESKME034	ARYUT SARASWAT		
98	16ESKME035	ASHOK KUMAR SHESMA		
99	16ESKME036	ASHOK NITHARWAL		
100	16ESKME304	NISHANT DIWAKER (CE to ME)		
101	16ESKME037	ASHUTOSH RANJAN		
102	16ESKME038	ASHUTOSH SINGH MEENA		
103	16ESKME039	ASHWIN NAIR		
104	16ESKME041	AYUSH DHAMANI		
105	16ESKME042	BHANU PRATAP SINGH SHEKHAWAT		
106	16ESKME043	BHARAT BANSAL		
107	16ESKME044	BHAVESH JAIN		
108	16ESKME045	CHANDAN KUMAR PRAJAPATI		
109	16ESKME046	CHINMAY TRIVEDI		
110	16ESKME047	DARSH JAIN		
111	16ESKME048	DARSHAN KUMAR VERMA		
112	16ESKME050	DEEPAK SHARMA (R.S.)		
113	16ESKME052	DEEPENDRA SINGH CHUNDAWAT		
114	16ESKME054	DEEPIKA SHARMA		
115	16ESKME055	DEVANSHU MATHUR		
116	16ESKME056	DINESH PRADHAN		
117	16ESKME058	DIVYA PRATAP SINGH SHAKTAWAT		
118	16ESKME059	DIVYANSH GAUR		
119	16ESKME060	GAGAN MATHUR		
120	16ESKME061	GAJANAND JANGID		
121	16ESKME062	GAURAV CHAUDHARY		
122	16ESKME064	GAURAV SINGH JADAUN		
123	16ESKME065	GAURAV SONI		
124	16ESKME070	HARSH TENGURIYA		
125	16ESKME071	HARSHIT KUMAR MALVIYA		
126	16ESKME072	HARSHIT SHARMA		
127	16ESKME074	HEMENDRA SINGH RAJAWAT		

128	16ESKME075	HIMANSHU CHOUDHARY		
129	16ESKME079	KALPESH SUTHAR		
130	16ESKME148	RUCHI JAISWAL		
131	16ESKME083	KUNAL VERMA		
132	16ESKME085	LAKSHYA KUMAR KALOUSIA		
133	16ESKME086	LAKSHYA SHARMA		
134	16ESKME090	MANISH CHAUHAN		
135	16ESKME093	MAYANK VYAS		
136	16ESKME094	MD SHAHID		
137	16ESKME095	MD WASIF ZAFAR ANSARI		
138	16ESKME096	MOHAK SWARNKAR		
139	16ESKME097	MOHAMMAD SHOEB		
140	16ESKME098	MOHD ROMAN		
141	16ESKME099	MOHD ZAHID ANSARI		
142	16ESKME100	MOHIT KUMAR PAREEK		
143	16ESKME101	MOHIT RUNWAL		
144	16ESKME102	MOHIT SINGH		
145	16ESKME103	MOHIT SUNDA		
146	16ESKME105	MONU SAINI		
147	16ESKME107	MUKUL JANGIR		
148	16ESKME108	MUKUL PICHUNIA		
149	16ESKME110	NAMAN GARG		
150	16ESKME111	NAVDEEP PANDEY		
151	16ESKME112	NIKUNJ AGARWAL		
152	16ESKME113	NIMIT GUPTA		
153	16ESKME114	NISHANT ARUN SHARMA		
154	16ESKME115	NITIN YADAV		
155	16ESKME116	PANKAJ KASHYAP		
156	16ESKME117	PARTH SINGHAL		
157	16ESKME121	PRAGEET SHARMA		
158	16ESKME122	PRAKHAR JAIN		
159	16ESKME123	PRANAY SHUKLA		
160	16ESKME124	PRANJAL SHARMA		
161	16ESKME125	PRASHANT AGRAWAL		
162	16ESKME128	PRATEEK JAIN		
163	16ESKME129	PRATEEK SHARMA		
164	16ESKME130	PRATIK KUMAR		
166	16ESKME134	RAHUL CHOUHAN		
167	16ESKME136	RAJAT JAIN		
168	16ESKME137	RAJAT KUMAR		
169	16ESKME138	RAJAT PANDEY		
170	16ESKME139	RAJESH SHARMA		
171	16ESKME140	RAJPAL YADAV		
172	16ESKME141	RAVI RAJ RANJAN		

173	16ESKME142	RIBHU KUMAR VYAS		
174	16ESKME143	RISHABH RAO		
175	16ESKME144	ROHIT AGARWAL		
176	16ESKME146	RONAK AGARWAL		
177	16ESKME149	RUPESH KUMAR		
178	16ESKME150	SAGAR RATHORE		
179	17ESKME200	Ashish Ranjan		
180	17ESKME201	Kamal Kishor		
181	17ESKME202	Mridulla Mathur		
182	17ESKME203	Sony Dey		
183	17ESKME204	Vikash Jat		
184	16ESKME152	SAKET KHANDELWAL		
185	16ESKME154	SHAILENDRA SINGH RATHORE		
186	16ESKME155	SHER MOHAMMAD		
187	16ESKME157	SHUBHAM		
188	16ESKME159	SHUBHAM KAR		
189	16ESKME160	SHUBHAM RATHORE		
190	16ESKME161	SHUBHAM SAINI		
191	16ESKME162	SHUBHRANSHU PANWAR		
192	16ESKME164	SUMIT SHEKHAR		
193	16ESKME165	SUPREET		
194	16ESKME166	SURAJ CHOUDHARY		
195	16ESKME168	SUSHANT KUMAR		
196	16ESKME169	TANAY CHOUDHARY		
197	16ESKME170	TANENDRA SINGH DHANKER		
198	16ESKME171	TANMAY SHARMA		
199	16ESKME173	TUSHAR MANGHNANI		
200	16ESKME174	VAIBHAV CHOUDHARY		
201	16ESKME175	VARSHIL DOSHI		
202	16ESKME179	VINAY KUMAR		
203	16ESKME181	VIPUL LALWANI		
204	16ESKME182	VIPUL SAMARIA		
205	16ESKME183	VISHNU RAM DEV		
206	16ESKME185	YOGESH KUMAWAT		
207	16ESKME700	ABHAY VIJAY VARGIYA		
208	16ESKME702	ABHISHEK SHARMA		
209	16ESKME704	AKASH SAINI		
210	16ESKME707	ANANT KUMAR BACHANI		
211	16ESKME708	ASHISH BHATI		
212	16ESKME709	BHANU PRATAP SINGH RATHORE		
213	16ESKME710	BHAWANSHU CHOURSIYA		
214	16ESKME712	DEVENDRA SINGH RATHORE		Devendra
215	16ESKME715	HARSHIT VERMA		
216	16ESKME718	HIMANSHU DADHICH		

Department of Mechanical Engineering

Results of GATE Online Test held on 23/01/2019

B. Tech. VIII Semester

S. No.	University Roll No.	Student Name	Obtain Marks
1	15ESKME098	MAYANK AGGARWAL	63.0
2	15ESKME043	DEVANSH DIXIT	48.0
3	15ESKME177	TARUN JAIN	43.0
4	15ESKME088	KUNAL RAO INGALE	41.7
5	15ESKME054	GANESH PATEL	41.0
6	15ESKME014	AKSHAY RATHORE	40.0
7	15ESKME009	AJAY TAWANIA	39.0
8	15ESKME055	GAURAV DADHICH	39.0
9	15ESKME090	LALIT KUMAR	39.0
10	15ESKME022	ANOP MUNDEL	37.0
11	15ESKME071	HRITVIK SHARMA	37.0
12	15ESKME115	NIKHIL KUMAR JAIN	36.0
13	15ESKME051	DIVYA JAIN	35.0
14	15ESKME084	KESHAV MOT	35.0
15	15ESKME061	GOURAV SAINI	34.0
16	15ESKME065	HARSHIT SONI	34.0
17	15ESKME076	JAIN SAPAN	34.0
18	15ESKME092	MANISH KUMAR KUMAWAT	32.3
19	15ESKME300	VISHAL SHARMA SHARMA	32.3
20	15ESKME182	VISHAL KUMAR SONI	32.0
21	15ESKME183	VISHNU CHEJARA	32.0
22	15ESKME161	SHIWANI S	30.3
23	15ESKME187	YOGESH PRAJAPAT	30.0
24	15ESKME052	DUSHYANT KARADIA	29.0
25	15ESKME184	VIVEK JANGID	29.0
26	15ESKME006	ADARSH PANSARI	28.0
27	15ESKME066	HARSHIT TIWARI	28.0
28	15ESKME155	SARVAN KUMAR DHADHICH	28.0
29	15ESKME180	VIKAS GAUR	28.0
30	15ESKME735	MRITYUNJAY CHOUBEY	28.0
31	15ESKME103	MD IMRAN	27.3
32	15ESKME020	ANKIT SAIN	27.0
33	15ESKME142	RAJESH KUMAR	27.0
34	15ESKME015	AMAN BAKOLIYA	26.7
35	15ESKME058	GAURAV SHARMA	24.0

S. No.	University Roll No.	Student Name	Obtain Marks
36	15ESKME750	RISHABH SHARMA	24.0
37	15ESKME037	CHINMAY CHOURDIA	23.3
38	15ESKME041	DEEPAK NOGIA	23.0
39	15ESKME165	SHUBHAM PRADHAN	22.0
40	15ESKME158	SHAILENDRA SARASWAT	21.7
41	15ESKME752	SAMPAT SINGH RAWAT	21.0
42	15ESKME047	DIKSHANT KHEMANI	20.0
43	15ESKME150	ROUNAK NUWAL	20.0
44	15ESKME162	SHREYANSH GOSWAMI	20.0
45	15ESKME188	YUGANSHU SHARMA	19.3
46	15ESKME033	AZAZ AKHTAR	17.0
47	15ESKME044	DEVENDRA KUMAR	16.0
48	15ESKME116	NITESH KUMAR GURJAR	16.0
49	15ESKME094	MANISH KUMAWAT	15.0
50	15ESKME035	BHANU PRATAP SINGH	12.0
51	15ESKME032	AYUSH GAUR	11.0
52	15ESKME059	GOPAL LAL KURI	11.0
53	15ESKME083	KARANVEER SINGH RATHORE	11.0
54	15ESKME175	SURESH KUMAR NAGARWAL	9.0
55	15ESKME087	KULDEEP SINGH RATHOR	7.0

Department of Mechanical Engineering

Results of GATE Online Test held on 23/01/2019

B. Tech. VI Semester

S. No.	University Roll No.	Student Name	Obtain Marks
1	16ESKME127	PRATEEK CHOUDHARY	77.0
2	16ESKME153	SANJEEV KUMAR	56.0
3	16ESKME180	VIPIN MUNDRA	51.7
4	16ESKME073	HARSHIT TIWARI	40.0
5	16ESKME040	ASHWINI KUMAR JANGID	37.7
6	16ESKME080	KAVITOSH SHARMA	32.0
7	16ESKME118	PAWAN SAINI	31.0
8	16ESKME147	RONAK PANCHAL	30.0
9	16ESKME302	ABHISHEK PRADHAN	30.0
10	16ESKME015	AKSHAT RAJ RATNA	28.0
11	16ESKME084	LAKSHYA KHANDELWAL	28.0
12	16ESKME158	SHUBHAM JAIN	28.0
13	16ESKME060	GAGAN MATHUR	27.7
14	16ESKME738	RAVI KUMAR	27.0
15	16ESKME089	MAHIPAL CHOUDHARY	25.7
16	16ESKME113	NIMIT GUPTA	23.3
17	16ESKME132	PRIYANSHU P	23.3
18	16ESKME032	APOORVE MISHRA	23.0
19	16ESKME177	VIJAY KUMAR SHARMA	23.0
20	16ESKME066	GHANISTH YADAV	22.7
21	16ESKME029	ANKIT MISHRA	22.0
22	16ESKME104	MOHIT TIWARI	22.0
23	16ESKME131	PRITAM MANNA	22.0
24	16ESKME301	GAURAV GUPTA	22.0
25	16ESKME054	DEEPIKA SHARMA	21.7
26	16ESKME072	HARSHIT SHARMA	21.0
27	16ESKME122	PRAKHAR JAIN	21.0
28	16ESKME012	AKHIL NAIR	20.0
29	16ESKME028	ANITA SHARMA	20.0
30	16ESKME076	JAYESH CHHABRA	20.0
31	16ESKME126	PRASHANT GUPTA	19.7
32	16ESKME022	AMAN SINGHAL	19.3
33	16ESKME053	DEEPESH GUPTA	19.0
34	16ESKME176	VEERENDRA SINGH	19.0
35	16ESKME714	HARSHIKESH KUMAR	19.0

S. No.	University Roll No.	Student Name	Obtain Marks
36	16ESKME062	GAURAV CHAUDHARY	18.0
37	16ESKME717	HEMANT SONI	18.0
38	16ESKME078	K VARDHRAJAN	17.3
39	16ESKME031	ANKUR SHARMA	17.0
40	16ESKME046	CHINMAY TRIVEDI	17.0
41	16ESKME082	KUNAL ADVANI	17.0
42	16ESKME077	JAYESH MALVIYA	17.0
43	16ESKME055	DEVANSHU MATHUR	16.7
44	16ESKME051	DEEPANSHU SAINI	15.0
45	16ESKME300	AAKASH SHARMA	15.0
46	16ESKME005	ABHISHEK SHARMA (M.K.S.)	14.0
47	16ESKME021	AMAN PANKAJ	14.0
48	16ESKME064	GAURAV SINGH JADAUN	14.0
49	16ESKME067	HARDIK MEHTA	14.0
50	16ESKME106	MUDIT BHARDWAJ	13.0
51	16ESKME148	RUCHI JAISWAL	13.0
52	16ESKME068	HARSH BARGOTA	12.7
53	16ESKME013	AKRITI SONI	12.0
54	16ESKME052	DEEPENDRA SINGH CHUNDAW	12.0
55	16ESKME069	HARSH KUMAR VERMA	12.0
56	16ESKME025	ANIKET RATHORE	11.3
57	16ESKME045	CHANDAN KUMAR PRAJAPATI	11.0
58	16ESKME016	AKSHAY KUMAR SINGHAL	10.7
59	16ESKME049	DEEPAK SHARMA (A.K.S.)	8.0
60	16ESKME056	DINESH PRADHAN	7.0
61	16ESKME071	HARSHIT KUMAR MALVIYA	7.0

VIII Sem. Pre GATE Test offline – 09/01/2019

Sr. No.	Student Name	Score	Rank	CorrectQCount	InCorrectQCount	TotalQCount
1	ANOP MUNDEL	34.01	1	25	11	36
2	GANESH PATEL	33.67	2	28	15	43
3	VIKAS GAUR	27.66	3	27	18	45
4	ADARSH GOYAL	27	4	28	20	48
5	MAYANK AGGARWAL	26.99	5	23	7	30
6	DIVYA JAIN	25.01	6	20	7	27
7	YUGANSHU SHARMA	24.65	7	26	25	51
8	HARSHIT SONI	23.35	8	22	19	41
9	PRIYANSHU KHANDELWAL	22.97	9	22	21	43
10	PRADHUMN MAHESHWARI	22	10	26	38	64
11	MRINAL MATH UR	21.99	11	21	17	38
12	KAPIL JETAWAT	21.32	12	27	38	65
13	VISHNUCHEJARA	20.69	13	20	19	39
14	VISHAL KUMAR SQNI	20.69	13	20	19	39
15	DEVANSH DIXIT	20.67	15	18	13	31
16	GOPAL SHARMA	18.01	16	17	19	36
17	DEVVRAT GOSWAMI	17.34	17	23	42	65
18	SHIWANI	17.31	18	20	17	37
19	MUDIT SHARMA	16	19	17	14	31
20	GAURAV MAHESH AWRI	15.67	20	18	27	45
21	ASHWANI GUPTA	14.64	21	25	40	65
22	CHINMAY CHOURDIA	14	22	18	28	46
23	NIMISH SHUKLA	13.68	23	17	18	35
24	AMAN BAKOLIYA	13.67	24	17	23	40
25	ROUNAK NUWAL	12.99	25	19	29	48
26	MANISH KUMAWAT	12.32	26	17	30	47
27	PRAMESHWAR LAL	12.01	27	11	11	22
28	MANISH KUMAR KUMUAWAT	12.01	27	14	19	33
29	HIMANSHU JAIN	11.35	29	11	15	26
30	DUSHAYANT KARADIA	11.31	30	12	9	21
31	MD IMRAN	11	31	16	22	38
32	PIYUSHS JANGID	10.98	32	20	36	56
33	ANKITSAIN	9.99	33	20	35	55
34	GOURAV SAINI	9.33	34	12	21	33
35	DEEPAK NOGIA	7.68	35	15	30	45
36	SARVAN KUMAR DHADHICH	7.04	36	7	12	19
37	NIKHIL KUMAR JAIN	6.69	37	9	17	26
38	SUNIL KUMAWAT	6.3	38	17	30	47
39	HARSHIT TIWARI	5.99	39	12	15	27
40	RAJESH KUMAR	5.66	40	10	16	26
41	DEVENDRA KUMAR	4.67	41	12	29	41
42	ROUNAKDHATTERWAL	3.35	42	14	41	55
43	AJAY KUMAMR BAIRWA	3.33	43	14	33	47
44	HITANSHU BHARDWAJ	2.7	44	6	14	20
45	ROHITBAIRWA	2.65	45	18	47	65
46	KULDEEP SINGH	2.34	46	9	18	27
47	RAVI CHOUDHARY	1.67	47	6	13	19
48	DIVYA PAPNDYA	1.67	47	11	29	40
49	ROHIT MALVIYA	1.32	49	17	48	65

50	SAMPAT SINGH R WAT	1.02	50	8	20	28
51	SURESHKUMARNAGARWAL	0	51	15	50	65
52	VISHAL SHARMA	-0.34	52	14	44	58
53	ANKUR SHARMA	-0.68	53	15	48	63
54	BHANU PRATAP SINGH	-6.35	54	5	27	32
55	VANSHDEEP SINGH RATHOR	-7.03	55	12	43	55

VI Sem. Pre GATE Test Offline – 09/01/2019

Sr. No.	Student Name	Score	Rank	CorrectQCount	InCorrectQCount	TotalQCount
1	SANJEEV KUMAR	47.65	1	37	11	48
2	PRATEEK CHOUDHARY	47.32	2	36	10	46
3	VIPIN MUNDRA	35.99	3	30	9	39
4	ANITA SHARMA	24.01	4	20	19	39
5	AKSHAT RAJ RATNA	23.01	5	18	11	29
6	SHIVAM CHOUDHARY	22.33	6	17	3	20
7	SIDDHANT PACHOURI	19.99	7	17	7	24
8	ROHIT SABDHANI	18.34	8	18	12	30
9	VIPUL SAMARIA	17.67	9	17	13	30
10	SHASHIKANT YADAV	17.34	10	13	6	19
11	DEEPESH GUPTA	17.01	11	14	3	17
12	VIJAY KUMAR SHARMA	17	12	13	4	17
13	SHUBHAM JAIN	15.35	13	19	25	44
14	MAHIPAL CHOUDHARY	14	14	13	8	21
15	KAVITOSH SHARMA	13.67	15	17	7	24
16	SACHIN SHARMA	13.67	15	16	15	31
17	DEVANSHU MATHUR	13.65	17	19	31	50
18	DEVANSH SONI	13.35	18	13	15	28
19	NAMAN GARG	13.31	19	20	29	49
20	SHIVANSH OGALE	12.67	20	9	3	12
21	ANKUR SHARMA	12.67	20	11	13	24
22	SHUBHAM RATHORE	12.35	22	11	7	18
23	PAWAN SAINI	12.33	23	13	9	22
24	JAYESH CHHABRA	12.02	24	10	10	20
25	VIKAS AT	12.01	25	14	19	33
26	TEJEND AR SINGNH	11.98	26	23	42	65
27	MANISHCHAUHAN	11.33	27	10	11	21
28	KALPESH SUTHAR	11.02	28	11	10	21
29	ABHISHEK BISHNOI	10.67	29	14	19	33
30	RONAK PANCHAL	10.67	29	10	7	17
31	AMAN AGARWAL	10.35	31	11	9	20
32	APOORVE MISHRA	10.34	32	11	14	25
33	ABHISHDK PRAH AN	10.01	33	11	11	22
34	HEMANT SONI	10.01	33	9	11	20
35	PRASHANT GUPTA	10	35	10	12	22
36	RAHUL JAIN	9.99	36	21	39	60
37	DEEPANSHU SAINI	9.68	37	9	8	17
38	AAKASH SHARMA	9.32	38	11	14	25
39	MAYANK GUPTA	9.01	39	10	9	19
40	DEEPAK SHARMA	9	40	7	2	9
41	HA SHHI K MA A	8.98	41	10	12	22
42	YOGESH KUMAR	8.65	42	14	19	33
43	DEEPENDRA SINGH	8.34	43	8	6	14
44	GAURAV GUPTA	8.32	44	10	12	22
45	YOGESH KUMAWAT	7.68	45	7	8	15
46	AKRITI SONI	7.67	46	10	17	27
47	PULKIT JAIN	7.67	46	8	7	15
48	RUCHI JAISWAL	7.35	48	8	9	17
49	NIMIT GUPTA	7.33	49	10	13	23
50	VISHAL CHUNLETIA	7	50	11	18	29
51	VISHNU RAMDEV	6.66	51	8	8	16

52	GHANISTH YADAV	6.34	52	5	2	7
53	AKSHAY KUMAR SINGHAL	6.34	52	8	14	22
54	SHAILENDRA SINGH	6.33	54	10	13	23
55	ABHISHEKSSHARMA	6.01	55	9	9	18
56	AKHIL NAIR	6.01	55	9	15	24
57	AKSHAT GAUTAM	6	57	5	2	7
58	PRATIK KUMAR	5.67	58	6	3	9
59	SHAILANDER SINGH	5.67	58	6	9	15
60	DIVYANSH GAUR	5.67	58	5	5	10
61	HARSHIKESH KUMAR	5.66	61	8	12	20
62	AKASH SINGHAL	5.36	62	10	20	30
63	CHINMAYTRIVEDI	5.34	63	9	14	23
64	GAURAV J BEDI	5.01	64	6	7	13
65	AMAN PANKAJ	5	65	7	6	13
66	GAURAV CHAUDHARY	4.67	66	11	23	34
67	DARSH I JAIN	4.65	67	14	31	45
68	BHARAT BANSAL	4.35	68	7	9	16
69	SAWAN ATKEWAL	4.33	69	16	41	57
70	YASH PANDEY	3.97	70	20	45	65
71	BHANU PRATAP	3.68	71	10	18	28
72	LAKSHYA KUMAR KALOSUSIA	3.67	72	11	29	40
73	LAKSHYA KHANDELWAL	3.67	72	9	19	28
74	LAVISH JAIN	3.65	74	8	17	25
75	ASHWINI KUMAR JANGID	3.34	75	8	18	26
76	ASHOK NITHARWAL	3.33	76	3	1	4
77	ARUN THAKURATHI	3.33	76	6	7	13
78	ANIKET RATTHORE	3	78	2	0	2
79	ABHAY VIJAY	2.99	79	6	7	13
80	JAYESSH MALVIYA	2.7	80	5	16	21
81	DINESH PRADHAN	2.64	81	18	44	62
82	ANIRUDH YOGI	2.33	82	8	19	27
83	MRIDULLAMATHUR	2.32	83	5	6	11
84	VIPUL LALWANI	2.02	84	6	16	22
85	ABHISHEK SHARMA	1.99	85	7	17	24
86	SHUBHAM KAR	1.99	85	6	9	15
87	AMANN SINGHAL	1.66	87	4	8	12
88	GAG NMATHUR	1.34	88	7	18	25
89	KUNAL VERMA	0.69	89	5	21	26
90	MONUSAINI	0.38	90	5	24	29
91	RAJPAL YADAV	0.35	91	4	9	13
92	SATYAM	0.34	92	2	4	6
93	ABHIJEET KUMAR	0.01	93	5	17	22
94	MD SHAHID	0.01	93	6	17	23
95	AAKASH YADAV	0	95	0	0	0
96	KULDEEPSINGH	-0.31	96	5	19	24
97	RAJAT PANDEY	-0.34	97	13	36	49
98	ASHOKKUMARSHESMA	-0.62	98	5	20	25
99	CHANDAN KUMAR PRAJAPAT	-1.35	99	16	49	65
100	KAMAL KISHOR	-1.37	100	5	13	18
101	ABHISHEK GAR G	-2.35	101	8	23	31
102	NEERAJ PRATAP SINGH	-2.68	102	8	26	34
103	HARSHIT SHARMA	-3.33	103	12	35	47

104	MD WASIF ZAFAR ANSARI	-4.34	104	9	30	39
105	DEEPIKA SHSAHRMA	-5.01	105	6	31	37
106	ABHISHEK SHARMA	-7.33	106	5	29	34
107	GAURAVS INGHJAD ON	-7.71	107	7	31	38
108	ABIR BERA	-8.01	108	6	27	33
109	ABHIJEETSHARMA	-11.68	109	10	54	64

GATE (VII) CLASSES

Subject ..... Branch ME Semester VII L/T/P/...../...../.....

(I Shift)

Sr No	R #	Name	17/07	18/07	19/07	20/07	21/07	22/07	24/07	25/07	26/07
1	001	Aashish Jha	A	A	1	2	A	A	3	4	5
2	002	Aashish Purohit	A	A	A	1	A	A	A	A	A
3	011	Anand Kumar	1	2	3	4	5	6	A	A	7
4	013	Ankit Kumar	1	2	3	4	5	A	6	7	A
5	14	Ankur Mittal	1	A	A	2	A	A	A	A	A
6	15	Ankur Yadav	A	A	1	A	2	3	4	5	A
7	21	Anurag Singh	A	A	A	1	2	3	A	4	5
8	22	Arun Kumar	1	A	A	2	A	A	A	A	A
9	30	Chirag Vadaria	1	2	3	A	A	A	4	5	6
10	32	Deepesh Kumar	1	2	A	3	A	A	4	5	A
11	35	Diptadeep Chandra	1	A	A	2	3	4	A	A	A
12	37	Gajendra Singh	1	2	A	3	A	A	4	5	6
13	45	Himanshu Goyal	A	1	A	A	A	A	A	A	A
14	48	Jeetendra Kumar	A	A	A	A	A	A	1	2	3
15	50	Jitendra Singh	A	1	2	A	A	A	3	4	5
16	56	Mahendra Choudhary	A	A	A	1	A	A	A	A	A
17	58	Mayank Mishra	1	A	2	3	4	5	6	7	8
18	66	Murari Kumar	A	A	A	A	A	A	1	2	3
19	67	Noman Choudhary	1	A	A	2	A	A	3	4	5
20	71	Nikhil Jain	A	1	A	A	A	A	A	A	A
21	72	Nikhil Sharma	A	1	A	2	A	A	3	4	5
22	82	Purohit Nitin	A	A	A	1	A	A	2	3	4
23	83	Pushpendra	1	2	A	3	A	A	4	5	6
24	89	Raj Jurwal	A	A	A	A	A	A	3	4	5
25	94	Ravindra Sharma	1	2	A	3	4	A	5	A	A
26	97	Ritesh Kumar	A	A	A	X	X	A	3	3	4
27	102	Shiva Gurjar	1	2	A	3	4	A	5	6	7
28	104	Shubham Kr.	1	A	A	2	A	A	A	A	A
29	300	Ramnarayan Sharma	1	2	A	3	4	A	5	6	7
		~~Anurag Singh~~				1	~~2~~	~~3~~	A	4	

Sr No	R #	Name	27/07	28/07	29/07	30/07	31/07	01/08	02/08	03/08	04/08
1	001	Aashish Jha	8	9	10	11	A	12	13	14	15
2	002	Aashish Purohit	A	A	A	A	A	A	A	A	A
3	011	Anand Kumar	8	9	A	10	11	A	A	A	A
4	013	Ankit Kumar	8	9	10	11	A	A	12	A	A
5	14	Ankur Mittal	A	A	A	A	A	A	A	A	A
6	15	Ankur Yadav	6	7	8	9	10	A	11	A	12
7	21	Anurag Singh	6	7	8	9	10	A	A	A	A
8	22	Arun Kumar	A	A	A	A	A	A	A	A	A
9	30	Chirag Vadaria	A	7	8	9	10	11	A	A	A
10	32	Deepesh Kumar	6	7	8	9	A	10	11	12	13
11	35	Diptadeep Chandra	A	A	A	A	A	A	A	A	A
12	37	Gajendra Singh	7	8	9	A	10	11	A	12	A
13	45	Himanshu Goyal	A	A	A	A	A	A	A	A	A
14	48	Jeetendra Kumar	6	7	8	9	A	10	11	12	13
15	50	Jitendra Singh	6	7	8	9	10	11	A	A	A
16	56	Mahendra Choudhary	A	A	A	A	A	A	A	A	A
17	58	Mayank Mishra	7	8	9	10	A	A	11	12	13
18	66	Murari Kumar	4	5	6	7	8	9	10	A	A
19	67	Noman Choudhary	6	7	8	A	9	10	A	11	A
20	71	Nikhil Jain	A	A	A	A	A	A	A	A	A
21	72	Nikhil Sharma	6	7	8	9	10	A	A	A	A
22	82	Purohit Nitin	5	6	7	8	A	9	10	11	12
23	83	Pushpendra	7	8	9	10	11	12	13	A	A
24	89	Raj Jurwal	6	7	8	9	A	10	11	12	13
25	94	Ravindra Sharma	A	A	A	A	A	A	A	6	7
26	97	Ritesh Kumar	5	6	7	8	9	10	11	12	13
27	102	Shiva Gurjar	8	9	10	A	11	12	13	14	15
28	104	Shubham Kr.	A	A	A	A	A	A	A	A	A
29	300	Ramnarayan Sharma	8	9	10	11	12	13	14	A	A
		~~Anurag Singh~~									

Sr No	R #	Name	01/09	02/09	03/09	04/09	05/09	06/09	07/09	08/09	09/09
1	001	Aashish Jha	16	17	18	19	20	21	22	23	24
2	002	Aashish Purohit	A	A	A	A	A	A	A	A	A
3	011	Anand Kumar	A	A	A	A	A	A	A	A	A
4	013	Ankit Kumar	16	17	18	19	20	21	22	23	24
5	14	Ankur Mittal	A	A	A	A	A	A	A	A	A
6	15	Ankur Yadav	15	16	17	18	19	20	21	A	22
7	21	Anurag Singh	A	A	11	12	13	A	14	15	16
8	22	Arun Kumar	A	A	A	A	A	A	A	A	A
9	30	Chirag Vadaria	A	16	17	18	19	20	21	22	A
10	32	Deepesh Kumar	A	16	17	18	19	20	21	22	23
11	35	Diptadeep Chandra	A	A	A	A	A	A	A	A	A
12	37	Gajendra Singh	A	14	15	16	17	18	19	20	21
13	45	Himanshu Goyal	A	A	A	A	A	A	A	A	A
14	48	Jeetendra Kumar	A	14	A	15	16	17	18	19	20
15	50	Jitendra Singh	A	16	17	18	19	20	21	22	23
16	56	Mahendra Choudhary	A	A	A	A	A	A	A	A	A
17	58	Mayank Mishra	17	A	18	19	A	20	21	A	A
18	66	Murari Kumar	A	14	15	16	17	A	18	A	19
19	67	Noman Choudhary	A	14	15	16	A	17	18	19	20
20	71	Nikhil Jain	A	A	A	A	A	A	A	A	A
21	72	Nikhil Sharma	14	A	15	16	17	18	19	20	21
22	82	Purohit Nitin	A	A	15	A	16	17	18	A	19
23	83	Pushpendra	16	17	18	A	19	20	21	22	23
24	89	Raj Jurwal	18	19	20	21	22	23	24	25	A
25	94	Ravindra Sharma	A	A	A	A	A	A	A	A	A
26	97	Ritesh Kumar	18	19	20	21	22	23	24	25	26
27	102	Shiva Gurjar	20	21	22	23	·	24	25	·	26
28	104	Shubham Kr.	A	A	A	A	A	A	A	A	A
29	300	Ramnarayan Sharma	A	A	A	A	A	A	A	A	A
		~~Anurag Singh~~									

28, 29, 30, 31 - 01 - 4-1 9 Infosys, 17 Punnach, 25 Capgemini 26

GATE

Subject ..... Branch ME Semester VII L/T/P/...../...../.....

Sr No	R #	Name	10/09	11/09	12/09	13/09	14/09	15/09	16/09	18/09	19/09
1	001	Aashish Jha	25	26	A	A	A	29	30	31	32
2	002	Aashish Purohit	A	A	A	A	A	A	A	A	A
3	011	Anand Kumar	A	A	A	A	A	A	A	A	A
4	013	Ankit Kumar	25	·	A	A	26	27	28	29	30
5	14	Ankur Mittal	A	A	A	A	A	A	A	A	A
6	15	Ankur Yadav	25	26	A	A	27	28	29	30	31
7	21	Anurag Singh	18	19	A	A	20	21	22	23	24
8	22	Arun Kumar	A	A	A	A	A	A	A	A	A
9	30	Chirag Vadaria	25	A	A	A	26	A	27	28	A
10	32	Deepesh Kumar	A	25	A	A	A	A	A	A	A
11	35	Diptadeep Chandra	A	A	A	A	A	A	A	A	A
12	37	Gajendra Singh	24	A	A	A	25	26	27	28	A
13	45	Himanshu Goyal	A	A	A	A	A	A	A	A	A
14	48	Jeetendra Kumar	22	23	A	A	A	24	25	26	27
15	50	Jitendra Singh	25	26	A	A	·	27	28	29	30
16	56	Mahendra Choudhary	A	A	A	A	A	A	A	A	A
17	58	Mayank Mishra	24	·	A	A	25	26	27	28	29
18	66	Murari Kumar	21	22	A	A	23	24	A	A	25
19	67	Noman Choudhary	21	22	A	A	·	23	24	25	26
20	71	Nikhil Jain	A	A	A	A	A	A	A	A	A
21	72	Nikhil Sharma	A	A	A	A	A	A	A	A	A
22	82	Purohit Nitin	21	A	A	A	22	23	24	25	A
23	83	Pushpendra	25	A	A	A	26	27	28	A	A
24	89	Raj Jurwal	27	28	A	A	29	30	31	32	33
25	94	Ravindra Sharma	A	A	A	A	A	A	A	A	A
26	97	Ritesh Kumar	27	28	A	A	29	30	31	A	A
27	102	Shiva Gurjar	28	29	A	A	30	31	32	33	34
28	104	Shubham Kr.	A	A	A	A	A	A	A	A	A
29	300	Ramnarayan Sharma	A	A	A	A	A	A	A	A	A
		~~Anurag Singh~~									

Sr No	R #	Name	20/09	21/09	22/09	23/09	MT-1	MT-2	Total
1	001	Aashish Jha	33	A	A	23			24, 26, 27, 28
2	002	Aashish Purohit	A	A	A	A			29, 30
3	011	Anand Kumar	A	A	A	A			
4	013	Ankit Kumar	31	A	A	A			
5	14	Ankur Mittal	A	A	A	A			
6	15	Ankur Yadav	32	A	A	A			
7	21	Anurag Singh	25	26	A	A			
8	22	Arun Kumar	A	A	A	A			
9	30	Chirag Vadaria	A	A	A	A			
10	32	Deepesh Kumar	A	A	A	A			
11	35	Diptadeep Chandra	A	A	A	A			
12	37	Gajendra Singh	28	A	A	A			
13	45	Himanshu Goyal	A	A	A	A			
14	48	Jeetendra Kumar	28	A	A	A			
15	50	Jitendra Singh	31	A	A	A			
16	56	Mahendra Choudhary	A	A	A	A			
17	58	Mayank Mishra	30	A	A	A			
18	66	Murari Kumar	A	A	A	A			
19	67	Noman Choudhary	27	A	A	A			
20	71	Nikhil Jain	A	A	A	A			
21	72	Nikhil Sharma	A	A	A	A			
22	82	Purohit Nitin	A	A	A	A			
23	83	Pushpendra	29	A	A	A			
24	89	Raj Jurwal	34	A	A	A			
25	94	Ravindra Sharma	A	A	A	A			
26	97	Ritesh Kumar	31	A	A	A			
27	102	Shiva Gurjar	35	A	A	A			
28	104	Shubham Kr.	A	A	A	A			
29	300	Ramnarayan Sharma	A	A	A	A			
		~~Anurag Singh~~							

Blood Pressure 2/10

Gandh Jayanti

Subject: GATE CLASSES Branch: ME Semester: VII L/T/P/ / /
(II Shift)

	R #	Name	1	2	3	4	5	6	7	8	9	10	11	12	13	14	15	16	17	18	19	20	21	22	23
30	706	Amit Tolmbia		1	A	2	3	4	5	A*	6	7	8	9	10	11	12	13	14	15	16	17	18	19	20
31	708	Anup Kumar		A	A	A	A	A	A	1	2	3	4	5	6	7	8	9	10	11	12	13	14	15	16
32	711	Chirayu Jain		1	2	3	4	5	6	A*	8	9	10	11	12	13	14	15	A	16	17	18	19	20	21
33	715	Ganga Prasad		1	2	3	4	5	6	A*	7	8	9	10	11	12	A	A	13	14	A	A	15	A	A
34	718	Gaurav Sharma		1	A	A	2	3	4	A	A	A	A	A	5	A	A	A	A	A	A	A	A	A	A
35	722	Jay Vyas		1	2	3	4	5	6	A*	7	8	9	10	11	12	13	14	15	16	17	18	19	20	21
36	723	Kamal Kasana		1	2	3	4	5	6	A*	7	8	9	A	10	11	12	13	14	15	16	17	18	19	20
37	728	Mahendra Sharma		A	1	A*	A	A	A	A	2	A	3	4	A	A	5	6	7	A	A	A	A	A	A
38	729	Mahesh Kumar		A	1	2	3	4	5	6	7	8	9	10	11	A	12	13	14	15	A	A	16	A	A
39	735	Nishant Dixit		A	A	A	1	2	A	3	4	A	5	A	A	A	A	A	A	A	A	A	A	A	A
40	736	Pingaksha Dwivedi		1	2	A	3	4	5	A	A	6	7	8	9	A	10	A	A	A	A	A	A	A	A
41	744	Ranjeev Kumar		A	A	A	A	A	1	A	2	3	4	5	7	8	9	10	11	12	13	14	15	16	17
42	745	Rochak Choubisa		1	A	A	2	3	4	A	5	A	A	6	A	A	A	A	A	A	A	A	A	A	A
43	746	Rohitash Pareek		A	1	A	A	A	2	A	A	A	A	A	A	A	A	A	A	A	A	A	A	A	A
44	747	Sagar Khandelwal		A	A	A	1	2	3	A	4	A	A	A	A	A	A	A	A	A	A	A	A	A	A
45	748	Sagar Sharma		1	2	3	4	5	6	A	7	8	9	10	11	12	13	14	15	16	17	18	19	A	A
46	749	Sahaish Vashistha		A	A	A	1	2	3	A	4	A	A	5	6	7	8	A	A	A	A	A	9	10	11
47	750	Sahil Aggarwal		1	2	A	3	4	5	A	6	A	A	A	A	A	A	A	A	A	A	A	A	A	A
48	755	Vaibhav Birla		1	2	A	3	4	5	6	7	8	9	10	11	12	13	14	15	16	17	18	19	20	21
49	756	Vaibhav Vyas		1	2	3	4	5	6	A*	7	8	9	10	11	12	13	14	A	15	16	17	18	19	20
50	767	Yashwant Tailor		1	2	A	3	4	5	A	6	7	8	A	9	10	A	A	A	A	A	A	11	A	A
51	763	Yogesh Kumawat		1	A	A	3	4	5	A	6	7	8	9	A	A	A	A	A	A	A	A	A	A	A
52	752	Shubh Agarwal		1	2	A	4	5	6	A	7	8	A	9	A	A	A	A	A	A	A	A	A	A	A
53	751	Tejendra Badiwal		1	2	3	4	5	6	A	7	8	A	A	A	A	9	A	A	A	A	A	A	A	A
54.		Anshuman Singh	→				1	A	A	2	3	4	5	6	7	A	A	A	A	A	A	A	A	A	A
55.		Rajesh Gupta	←						1	A	2	A	3	4	5	A	6	7	8	9	A	10	11	A	A
56.		Satyaprakash	←									→	1	2	3	4	5	6	7	8	A	9	10	11	12
57.		Manish	←										→	1	2	3	4	5	6	7	8	9	10	11	12
58.		Nayank	←										→	1	2	3	4	5	6	7	8	9	10	11	12
59.		Mukesh	←										→		1	2	3	4	5	6	A	7	8	9	A
60.		Ritesh Jha	←											→	1	2	3	4	5	6	7	8	9	10	A
61		Lalit	←																						
			31	28	16	38	26	21	16																

Subject: GATE CLASSES Branch: ME Semester: VII L/T/P/ / /

	24	25	26	27	28	29	30	31	32	33	34	35	36	37	38	39	40	41	42	43	44	45	46	47	48	MT-1	MT-2		Total
	21	22	23	24	25	26	A	A	27	28	29	←			→	←	→	30	31	32	33	34	A	A	35	36	37	A		
	17	18	19	20	21	22	23	24	25	26	27	MID			CRT		28	29	30	31	A	32	33	34	35	36	A	B		
	22	23	24	25	26	27	28	29	30	31	A	TERM					32	33	34	35	36	37	A	38	39	40	A	L		
	16	A	17	18	19	A	20	A	21	22	A						23	24	A	A	25	A	26	27	28	29	A	O		
	A	A	6	A	A	A	A	A	A	A							A	A	A	A	A	A	A	A	A	A	A	O		
	22	23	24	25	26	27	28	29	30	31							32	33	34	35	36	37	A	38	39	40	A	D		
	21	22	23	24	25	A	26	27	A	28	29						30	31	32	A	33	34	A	35	36	A	A			
	A	A	A	A	A	A	A	A	A	A							A	A	A	A	A	A	A	A	A	A	A	D		
	17	A	18	19	20	A	21	22	23	A	A						24	25	26	27	28	29	A	A	A	A	A	O		
	A	A	A	A	A	A	A	A	A	A							A	A	A	A	A	A	A	A	A	A	A	N		
	A	A	A	A	A	A	A	A	A	A							A	A	A	A	A	A	A	A	A	A	A	A		
	18	1	19	20	21	22	23	1	24	25	26						27	28	29	30	31	32	A	33	34	A	A	T		
	A	A	A	A	A	A	A	A	A	A							A	A	A	A	A	A	A	A	A	A	A	I		
	A	A	A	A	A	A	A	A	A	A							A	A	A	A	A	A	A	A	A	A	A	O		
	A	A	A	A	A	A	A	A	A	A							A	A	A	A	A	A	A	A	A	A	A	N		
	20	21	22	23	24	25	26	27	A	A	28						29	30	31	32	33	A	A	34	35	36	A			
	12	13	14	15	16	17	18	A	A	A	19						20	21	A	22	A	23	24	25	26	27	A	C		
	A	A	A	A	A	A	A	A	A	A	A						A	A	A	A	A	A	A	A	A	A	A	A		
	22	23	24	25	26	27	A	A	28	29	30						31	32	33	34	A	35	36	37	38	39	A	M		
	21	22	23	24	25	26	27	28	29	30	.						31	A	32	33	34	35	A	36	A	37	A	P		
	A	A	A	A	A	A	A	A	A	A	A						A	A	A	A	A	A	A	A	A	A	A			
	A	A	A	A	A	A	A	A	A	A	A						A	A	A	A	A	A	A	A	A	A	A			
	A	A	A	A	A	A	A	A	A	A	A						A	A	A	A	A	A	A	A	A	A	A			
	A	A	A	A	A	A	A	A	A	A	A						A	A	A	A	A	A	A	A	A	A	A			
	A	A	A	A	A	A	A	A	A	A	A						A	A	A	A	A	A	A	A	A	A	A			
	A	12	13	14	15	16	17	18	19	20	21						A	A	22	23	24	25	26	.	27	28	A			
	13	14	15	16	17	A	18	19	20	21	A						22	23	24	A	25	26	27	28	29	30	A			
	13	14	15	16	17	A	18	19	20	21	A						A	A	22	23	24	25	26	27	28	29	A			
	13	14	15	16	17	18	19	A	20	21	22						23	24	25	A	A	26	27	28	29	30	A			
	10	11	12	13	14	15	16	17	18	19	20						21	22	23	24	A	A	25	26	27	28	A			
	11	12	13	14	15	A	16	17	18	19	20						21	22	23	24	25	26	27	28	A	A	A			
→	1	2	3	4	5	6	7	8	9	A							10	11	12	13	.	14	15	16	17	18	A			

Course Coverage

Subject GATE Branch ME Semester [redacted] L/T/P/...../...../.....
(Per week as per scheme)

Date	Lecture No.	Coverage
17/07	1	Introduction to GATE & IES (ESE)
18/07	2	Thermodynamics, System, Surroundings, process, cycle
19/07	3	properties, work, Heat (Problems)
20/07	4	First law, steady flow process
21/07	5	Second Law of Thermodynamics
22/07	6	Clausius statement, H.P, Refrigerator
24/07	7	Entropy
25/07	8	Availability & Irreversibility
26/07	9	pure substance
27/07	10	Thermodynamic Relations
28/07	11	Stress, strain, Elastic constants
29/07	12	Types of Loads & Couples
31/07	13	Axially loaded members & Thermal stresses
01/08	14	Bending of Beams
02/08	15	Theory of pure Torsion
03/08	16	Direct shear stress
04/08	17	Principal planes & stresses
05/08	18	Elastic failure theories
08/08	19	Shear Force & BMD
09/08	20	Shear Force & BMD
10/08	21	Deflection of Beams
12/08	22	Deflection of Beams
13/08	23	Refrigeration & Air Conditioning
14/08	24	Air Refrigeration cycles
16/08	25	Vapour Compression Cycle
17/08	26	Pyrometry.
18/08	27	Metal Cutting & angles from Cutting tool
19/08	28	Tool designation & Tool life
20/08	29	Casting - Gating system
22/08	30	Welding (Numericals on Butt & Lap joint)
23/08	31	Operations Mgmt - Forecasting
24/08	32	Inventory Control & Mgmt
25/08	33	Inventory Control & mgmt
26/08	34	Queuing Theory
11/09	35	PERT & CPM
12/09	36	PERT & CPM
13/09	37	Limits, Fits & Tolerances
14/09	38	Heat Transfer.
15/09	39	Conduction (Steady)
16/09	40	Conduction (Steady)
18/09	41	Conduction
19/09	42	Convection (External forced)
20/09	43	Convection (External forced)
21/09	44	Convection (Internally forced.
22/09	45	Heat Exchangers

SWAMI KESHVANAND INSTITUTE OF TECHNOLOGY, MANAGEMENT, AND GRAMOTHAN

DEPARTMENT OF MECHANICAL ENGINEERING

TIME-TABLE (PROVISIONAL) DATE: 6/08/2016

VII SEM. (SECTION A) WEF: July 17, 2017

	8:00AM - 9:00AM	9:00AM- 10:00AM	10:00AM- 11:00AM	11:00AM- 11:30AM	11:30AM- 12:30PM	12:30PM- 01:30PM	01:30PM- 2:30PM	02:30PM- 3:30PM
MONDAY	FEM LAB (A1) (TS)			BREAK	OR (TA1) comp lab GF	FREE ACTIVITY	GATE CLASSES 104 (MAIN BLOCK)	GATE CLASSES 104 (MAIN BLOCK)
	OR (TA2) 2T2	TURBO (TA2) 2T2	LIBRARY (TA2)		RAC (TA2) 2T2			
	THERMAL LAB (A3) (AN)				LIBRARY (TA3)			
TUESDAY	ELECTIVE PS ME 102	RAC AN ME 102	OM DJ ME 102		PTIV (MKS/PS) ME 102		RAC (TA1) 106	GATE CLASSES 104 (MAIN BLOCK)
							LIBRARY (TA2)	
							LIBRARY (TA3)	
WEDNESDAY	ELECTIVE PS ME 102	RAC AN ME 102	TURBO RS ME 102		OR VJ ME 101	OM DJ ME 101	GATE CLASSES 104 (MAIN BLOCK)	GATE CLASSES 104 (MAIN BLOCK)
THURSDAY	TURBO RS ME 102	FEM TS ME 102	OM DJ ME 102		OR VJ ME 102	PROJECT STAGE I (AM/AKD/RSC) ME 102	ELECTIVE PS ME 102	GATE CLASSES 104 (MAIN BLOCK)
FRIDAY	FEM TS ME 102	RAC AN ME 102	OR VJ ME 102		OR (TA1) 2T2	TURBO (TA1)	LIBRARY(TA1)	GATE CLASSES 104 (MAIN BLOCK)
					THERMAL LAB (A2) (AN)			
					FEM LAB (A3) (TS)			
SATURDAY	THERMAL LAB (A1) (NKS)				TURBO RS ME 101	FEM TS ME 101	GATE CLASSES 104 (MAIN BLOCK)	GATE CLASSES 104 (MAIN BLOCK)
	FEM LAB (A2) (TS)							
	OR (TA3) 2T2	RAC (TA3) 2T2	TURBO (TA3) 2T2					

THEORY:7ME1A:FEM-Finite Element Method,**7ME2A :-RAC-** Refrigeration & Air-conditioning, **7ME3A:OR-** Operations Research, **7ME4A:TURBO**-Turbomachines,**7ME5A:OM**-Operation Management, **7ME6A:ELECTIVE-**

LABS:7ME7A Thermal Lab-II, **7ME8A**FEM LAB., **7METR**Practical Training and Industrial Visit, **7MEPR**: Project Stage-I

Faculty: AKD:Ajay K Dhanopia , **AM** : Alok Mathur , **AN**:Ashish Nayyar , **DJ**:Dheeraj Joshi, **MKS**:Manoj K Sain, **NKS**: Nikhil Sharma , **PS**: Praveen Saraswat, **RS**: Renu Sharma , **RSC**- Rajendra S Chundawat, **TS**:Trivendra Sharma, **VJ**: Vishnu Jangid

HEAD OF DEPARTMENT
MECHANICAL ENGINEERING

DINESH KUMAR SHARMA
TIME TABLE CO-ORDINATOR

SWAMI KESHVANAND INSTITUTE OF TECHNOLOGY, MANAGEMENT AND GRAMOTHAN

DEPARTMENT OF MECHANICAL ENGINEERING

TIME-TABLE (PROVISIONAL) DATE: 05/07/2017

VII SEM. (SECTION B) WEF: Oct 04, 2017

	8:00AM - 9:00AM	9:00AM- 10:00AM	10:00AM- 11:00AM	11:00AM- 11:30AM	11:30AM-12:30PM	12:30PM- 01:30PM	01:30PM-2:30PM	02:30PM- 3:30PM
MONDAY	RAC MAK ME 102	TURBO NKS ME 101	OR MKS ME 102	BREAK	PTIV (MKS/PS) ME 102		GATE CLASSES 104 (MAIN BLOCK)	GATE CLASSES 104 (MAIN BLOCK)
TUESDAY	THERMAL LAB (B1) (NKS)				TURBO NKS ME 101	OM DH ME 101	ELECTIVE PS ME 101	GATE CLASSES 104 (MAIN BLOCK)
	FEM LAB (B2)(NS)							
	RAC (TB3) 2T2	OR (TB3) 2T2	LIBRARY(TB3)					
WEDNESDAY	FEM NS ME 101	TURBO NKS ME 101	ELECTIVE PS ME 101		RAC (TB1) 301	FREE ACTIVITY	GATE CLASSES 104 (MAIN BLOCK)	GATE CLASSES 104 (MAIN BLOCK)
					LIBRARY(TB2)			
					TURBO(TB3) 2T2			
THURSDAY	OM DH ME 101	FEM NS ME 101	OM DH ME 101		FEM LAB (B1) (NS)			GATE CLASSES 104 (MAIN BLOCK)
					RAC (TB2) 2T2	OR (TB2) 2T2	TURBO (TB2) 2T2	
					THERMAL LAB (B3) (RS)			
FRIDAY	OR (TB1) 2T2	LIBRARY(TB2)	TURBO (B1) Comp. Lab (IF)		OR MKS ME 101	FEM NS ME 102	RAC MAK ME 101	GATE CLASSES 104 (MAIN BLOCK)
	THERMAL LAB (B2) (RS)							
	FEM LAB (B3) (NS)							
SATURDAY	OR MKS ME 102	RAC MAK ME 102	ELECTIVE PS ME 102		PROJECT STAGE I (AM/AKB/RSC) ME 102		GATE CLASSES 104 (MAIN BLOCK)	GATE CLASSES 104 (MAIN BLOCK)

THEORY:7ME1A:FEM-Finite Element Method,**7ME2A :-RAC-** Refrigeration & Air-conditioning, **7ME3A:OR-** Operations Research, **7ME4A:TURBO**-Turbomachines,**7ME5A:OM**-Operation Management, **7ME6A**:**ELECTIVE-**

LABS:7ME7A Thermal Lab-II, **7ME8A**FEM LAB., **7METR**Practical Training and Industrial Visit, **7MEPR**: Project Stage-I

Faculty: AM : Alok Mathur, **AKB**:Amit Kumar Bansal, **DH**: Dharmendra Hariyani, **NS:** NamitaSoni, **MAK**: Manoj Kumar, **MKS**:Manoj K Sain, **NKS:** Nikhil Sharma, **PS:** Praveen Saraswat, **RS:** Renu Sharma, **RSC-** Rajendra S Chundawat,

HEAD OF DEPARTMENT
MECHANICAL ENGINEERING

DINESH KUMAR SHARMA
TIME TABLE CO-ORDINATOR

SWAMI KESHVANAND INSTITUTE OF TECHNOLOGY, MANAGEMENT, AND GRAMOTHAN

DEPARTMENT OF MECHANICAL ENGINEERING

TIME-TABLE (PROVISIONAL) DATE: 05/07/2017

VII SEM. (SECTION S) **WEF: Aug 24, 2017**

	8:00AM - 9:00AM	9:00AM-10:00AM	10:00AM-11:00AM	11:00AM-11:30AM	11:30AM-12:30PM	12:30PM-01:30PM	01:30PM-2:30PM	02:30PM-3:30PM
MONDAY	OM AS ME 101	RAC AA ME 101	ELECTIVE SK ME 101	BREAK	FEM MA ME 101	OR SOA ME 101	GATE CLASSES 104 (MAIN BLOCK)	GATE CLASSES 104 (MAIN BLOCK)
TUESDAY	FEM MA ME 101	RAC AA ME 101	TURBO AB ME 101		FEM LAB (S1) (MA)			GATE CLASSES 104 (MAIN BLOCK)
					OR (TS2) 2T2	TURBO (TS2) 2T1	LIBRARY(TS2)	
					THERMAL LAB (S3) (AA)			
WEDNESDAY	TURBO (TS1) 2T2	LIBRARY(TS1)	OR (TS1) FM LAB		TURBO AB ME 102	PROJECT STAGE I (AM/SUD/VJ) (ME 102)	GATE CLASSES 104 (MAIN BLOCK)	GATE CLASSES 104 (MAIN BLOCK)
	THERMAL LAB (S2) (AA)							
	FEM LAB (S3) (MA)							
THURSDAY	THERMAL LAB (S1) (AA)				ELECTIVE SK ME 101	FEM MA ME 101	OM AS ME 101	GATE CLASSES 104 (MAIN BLOCK)
	FEM LAB (S2) (MA)							
	OR (TS3) 2T2	TURBO (TS3) 2T2	LIBRARY(TS3)					
FRIDAY	OR SOA ME 101	OM AS ME 101	ELECTIVE SK ME 101		PTIV (SUG/SK) ME 102		RAC (TS1) 2T2	GATE CLASSES 104 (MAIN BLOCK)
							LIBRARY(TS2)	
							LIBRARY(TS3)	
SATURDAY	TURBO AB ME 101	RAC AA ME 101	OR SOA ME 101		LIBRARY(TS1)	LIBRARY(TS1)	GATE CLASSES 104 (MAIN BLOCK)	GATE CLASSES 104 (MAIN BLOCK)
					RAC (TS2) 2T2	LIBRARY(TS2)		
					LIBRARY(TS3)	RAC (T S3) 2T2		

THEORY:7ME1A:FEM-Finite Element Method,**7ME2A :-RAC-** Refrigeration & Air-conditioning, **7ME3A:OR-** Operations Research, **7ME4A:TURBO**-Turbomachines,**7ME5A:OM**-Operation Management, **7ME6A:ELECTIVE-**

LABS:7ME7A Thermal Lab-II, **7ME8A**FEM LAB., **7METR**Practical Training and Industrial Visit, **7MEPR**: Project Stage-I

Faculty: AA: Ankit Agrawal, **AB:** Arun Beniwal **AM :** Alok Mathur, **AS:** Achin Srivastav, **SK:** Sunil Kumar, **SOA:**Suhaib Ansari, **SUD:**SudhanshuChajjed, **SUG:** Sudesh garg **SKB:**Sandeep K Bhaskar, **MA:**Manu Augustine ,

HEAD OF DEPARTMENT
MECHANICAL ENGINEERING

DINESH KUMAR SHARMA
TIME TABLE CO-ORDINATOR

SWAMI KESHVANAND INSTITUTE OF TECHNOLOGY, MANAGEMENT, AND GRAMOTHAN

DEPARTMENT OF MECHANICAL ENGINEERING

TIME-TABLE (PROVISIONAL) DATE 05/07/2017

V SEM. (SECTION A)

WEF: Aug **24, 2017**

	8:00AM - 9:00AM	9:00AM-10:00AM	10:00AM-11:00AM	11:00AM-11:30AM	11:30AM-12:30PM	12:30PM-01:30PM	01:30PM-2:30PM	02:30PM -3:30PM
MONDAY	DOM AKD ME 103	SEE NG ME 103	QAR AKB ME 103	BREAK	PE LAB (A1) (ROS)			FREE ACTIVITY
					DOM LAB II (A2) (AKD)		----------	
					HT LAB (A3) (CK)			
TUESDAY	MM ROS ME 103	MM ROS ME 103	SEE NG ME 103		DOM(A1)(AKD)(MD)	LIBRARY(TA1)	FREE ACTIVITY	
					PEDM (TA2)(TS)ME 2T1			
WEDNESDAY	PEDM (A1)(TS) ME 2T1		QAR AKB ME 104		HT DA ME 103	HT DA ME 103	WEDNESDAY ACTIVITY	
	DOM (A2) FM LAB	LIBRARY(TA2)						
THURSDAY	DOM LAB II (A1) (AKD)		----------		HT DA ME 103	HT DA ME 103	SEE NG ME 103	AE SS ME 103
	HT LAB (A2) (CK)							
	PE LAB (A3) (ROS)							
FRIDAY	DOM AKD ME 103	DOM AKD ME 103	AE SS ME 103		FREE ACTIVITY			
SATURDAY	MM ROS ME 103	AE SS ME 103	QAR AKB ME 103		HT LAB (A1) (CK)			FREE ACTIVITY
					PE LAB (A2) (ROS)			
					DOM LAB II (A3) (AKD)		----------	

THEORY:5ME1A: DOM- Dynamics of Machines,**5ME2A:HT**-Heat Transfer, **5ME3A:QAR**-Quality Assurance And Reliability,**5ME4A:MM**-Measurement and Meterology,**5ME5A:SEE**-Sociology and Economics for Engineers,**5ME6A.2:AE**-Automobile Engineering (Elective)

LABS:5ME7A Heat Transfer Lab, **5ME8A**P.E. LAB., **5ME9A**Dom Lab – II, **5ME10A**: Professional Ethics And Disaster Management, **5MEAA:**AutomobileEngg. Lab (Beyond Curriculum)

Faculty: AKB: Amit K Bansal, **AKD:**Ajay K Dhanopia , **CK:** Chandan Kumar, **DA:** Deepak Agrawal, **NG:**Nitin Goyal, **ROS:** Rahul Saraswat, **SS:**Sushil Surana, **TS:**Trivendra Sharma, **VKN:** Virendra Kumar Nagar

HEAD OF DEPARTMENT
MECHANICAL ENGINEERING

DINESH KUMAR SHARMA
TIME TABLE CO-ORDINATOR

SWAMI KESHVANAND INSTITUTE OF TECHNOLOGY, MANAGEMENT AND GRAMOTHAN

DEPARTMENT OF MECHANICAL ENGINEERING

TIME TABLE (PROVISIONAL)

VII SEM. (SECTION A) — 26-Sep-18

	I	II	III	BREAK	IV	V	VI	VI
	8:00-9:00	9:00-10:00	10:00-11:00	11:00-11:30	11:30-12:30	12:30-01:30	01:30-02:30	02:30-03:30
MONDAY	PROJECT STAGE I (AKD) (ME103)		OR(MKS) ME 103	BREAK	FEM (MA) ME 103	FEM (MA) ME 103	GATE Classes (SC)(ME 103)	
TUESDAY	FEM (MA) ME 102	RAC (AN) ME 103	CNC (PS) ME 102		TURBO (AB) ME 101	TURBO (AB) ME 101	GATE Classes (SC)(ME 103)	
WEDNESDAY	THERMAL ENGG LAB II (AN) (NG)A1		RAC (AN) ME2T1 A1		RAC (AN) ME 102	OR (MKS) ME 102	Wednesday Activity	
	OR (MKS) ME2T1 A2	FEM (MA) A2						
THURSDAY	OR (MKS) ME2T1 A1	FEM (MA) A1			FEM (MA) ME 102	OM (DH) ME 102	GATE Classes (SC)(ME 103)	
	THERMAL ENGG LAB II (AN) (NG)A2		RAC (AN) ME2T1 A2					
FRIDAY	PRACTICAL TRG (MKS)(DKS)ME 103		CNC (PS) ME 103		OR(MKS) ME 103	OM (DH) ME 103	GATE Classes (SC)(ME 103)	
SATURDAY	TURBO (AB) ME 103	RAC (AN) ME 103	CNC (PS) ME 103		OM (DH) ME 103	TURBO (AB) ME 103	GATE Classes (SC)(ME 103)	

SUB CODE	NAME OF COURSE
7ME1A	Finite Element Methods (FEM)
7ME2A	Refrigeration & Air-conditioning (RAC)
7ME3A	Operations Research (OR)
7ME4A	Turbomachines (TURBO)
7ME5A	Operations Management (OM)
7ME6A.3	CNC Machines and Programming (CNC)
7ME7A	Thermal Engineering Lab-II
7ME8A	Finite Element Method Lab
7METR	Practical Training & Industrial visit
7MEPR	Project-1

INITIALS	NAME OF FACULTY
AB	ARUN BENIWAL
AKD	AJAY KUMAR DHANOPIA
AN	ASHISH NAYAR
DH	DHARMENDRA HARIYANI
DKS	DINESH KUMAR SHARMA
MA	MANU AUGUSTINE
MKS	MANOJ KUMAR SAIN
NG	NITIN GOYAL
PS	PRAVEEN SARASWAT

DINESH KUMAR SHARMA
NAVEEN KUMAR SAIN
TIME TABLE COORDINATOR

SWAMI KESHVANAND INSTITUTE OF TECHNOLOGY, MANAGEMENT AND GRAMOTHAN

DEPARTMENT OF MECHANICAL ENGINEERING

TIME TABLE (PROVISIONAL)

VII SEM. (SECTION B) — 26-Sep-18

	I	II	III	BREAK	IV	V	VI	VI
	8:00-9:00	9:00-10:00	10:00-11:00	11:00-11:30	11:30-12:30	12:30-01:30	01:30-02:30	02:30-03:30
MONDAY	RAC (AA) ME 101	OR (VJ) ME 101	CNC (PS) ME 101	BREAK	TURBO (AB) ME 101	FEM (TS) ME 101	GATE Classes (SC) (ME 103)	
TUESDAY	CNC (PS) ME 103	TURBO (AB) ME 103	FEM (TS) ME 103		PROJECT STAGE I (AKB) ME 103		GATE Classes (SC) (ME 103)	
WEDNESDAY	TURBO (AB) ME 103	RAC (AA) ME 103	OR (VJ) ME 103		CNC (PS) ME 103	OM (DJ) ME 103	Wednesday Activity	
THURSDAY	FEM (TS) ME 103	RAC (AA) ME 103	OM (DJ) ME 103		PRACTICAL TRG. (MKS)(DKS)ME103		GATE Classes (SC)(ME 103)	
FRIDAY	FEM (TS) B1		OR (VJ) ME2T1 B1		OR (VJ) ME 102	TURBO (AB) ME 102	GATE Classes (SC)(ME 103)	
	RAC (AA) ME2T1 B2	THERMAL ENGG LAB II (AA) (NVN) B2						
SATURDAY	THERMAL ENGG LAB II (AA) (NVN) B1		RAC (AA) ME2T1 B1		OM (DJ) ME 301	FEM (TS) ME 301	GATE Classes (SC)(ME 103)	
	OR (VJ) ME2T1 B2	FEM (TS) B2						

SUB CODE	NAME OF COURSE
7ME1A	Finite Element Methods (FEM)
7ME2A	Refrigeration & Air-conditioning (RAC)
7ME3A	Operations Research (OR)
7ME4A	Turbomachines (TURBO)
7ME5A	Operations Management (OM)
7ME6A.3	CNC Machines and Programming (CNC)
7ME7A	Thermal Engineering Lab-II
7ME8A	Finite Element Method Lab
7METR	Practical Training & Industrial visit
7MEPR	Project-1

INITIALS	NAME OF FACULTY
AA	ANKIT AGARWAL
AB	ARUN BENIWAL
AKB	AMIT KUMAR BANSAL
DJ	DHEERAJ JOSHI
DKS	DINESH KUMAR SHARMA
MKS	MANOJ KUMAR SAIN
NVN	NAVEEN K SAIN
PS	PRAVEEN SARASWAT
TS	TRIVENDRA SHARMA
VJ	VISHNU JANGID

DINESH KUMAR SHARMA
NAVEEN KUMAR SAIN
TIME TABLE COORDINATOR

SWAMI KESHVANAND INSTITUTE OF TECHNOLOGY, MANAGEMENT AND GRAMOTHAN

DEPARTMENT OF MECHANICAL ENGINEERING

TIME TABLE (PROVISIONAL)

VII SEM. (SECTION C) — 26-Sep-18

	I	II	III	BREAK	IV	V	VI	VI
	8:00-9:00	9:00-10:00	10:00-11:00	11:00-11:30	11:30-12:30	12:30-01:30	01:30-02:30	02:30-03:30
MONDAY	CNC (SK) ME 301	FEM (CMK) A1 / THERMAL ENGG LAB II (NKS) (NVN) A2		BREAK	PRACTICAL TRG (PS) (MKS) ME 102		GATE Classes (SC) (ME 103)	
TUESDAY	OR (VJ) ME 101	OM (ACH) ME 101	TURBO (NKS) ME 101	BREAK	RAC(MAK)ME2T1 C1 / OR (VJ) ME301 C2	OR (VJ) ME 301	GATE Classes (SC) (ME 103)	
WEDNESDAY	FEM (CMK) ME 102	RAC (MAK) ME 102	OM (ACH) ME 102	BREAK	THERMAL ENGG LAB II (NKS) (NVN) A1 / FEM (CMK) A2		Wednesday Activity	
THURSDAY	FEM (CMK) ME 102	OR (VJ) ME 2T1 C1 / RAC (MAK) ME 102 C2	TURBO (NKS) ME 102	BREAK	PROJECT STAGE I (AKB) ME 101		GATE Classes (SC)(ME 103)	
FRIDAY	RAC (MAK) ME 101	CNC (SK) ME 101	FEM (CMK) ME 101	BREAK	TURBO (NKS) ME 301	OM (ACH) ME 301	GATE Classes (SC)(ME 103)	
SATURDAY	TURBO (NKS) ME 102	CNC (SK) ME 102	OR (VJ) ME 102	BREAK	FEM (CMK) ME 102	RAC (MAK) ME 102	GATE Classes (SC)(ME 103)	

SUB CODE	NAME OF COURSE
7ME1A	Finite Element Methods (FEM)
7ME2A	Refrigeration & Air-conditioning (RAC)
7ME3A	Operations Research (OR)
7ME4A	Turbomachines (TURBO)
7ME5A	Operations Management (OM)
7ME6A.3	CNC Machines and Programming (CNC)
7ME7A	Thermal Engineering Lab-II
7ME8A	Finite Element Method Lab
7METR	Practical Training & Industrial visit
7MEPR	Project-I

INITIALS	NAME OF FACULTY
ACH	ACHIN SRIVASTAV
AKB	AMIT KUMAR BANSAL
CMK	CHANDRA MOHAN KUMAR
MAK	MANOJ KUMAR SAINI
MKS	MANOJ KUMAR SAIN
NKS	NIKHIL SHARMA
NVN	NAVEEN K SAIN
PS	PRAVEEN SARASWAT
SK	SUNIL KUMAR
VJ	VISHNU JANGID

DINESH KUMAR SHARMA
NAVEEN KUMAR SAIN
TIME TABLE COORDINATOR

SWAMI KESHVANAND INSTITUTE OF TECHNOLOGY, MANAGEMENT AND GRAMOTHAN

DEPARTMENT OF MECHANICAL ENGINEERING

TIME TABLE (PROVISIONAL)

VII SEM. (SECTION S) — 26-Sep-18

	I	II	III	BREAK	IV	V	VI	VI
	8:00-9:00	9:00-10:00	10:00-11:00	11:00-11:30	11:30-12:30	12:30-01:30	01:30-02:30	02:30-03:30
MONDAY	OR (JIT) ME 102	OR (JIT) ME2T1 S1 RAC (NG) ME 102 S2	FEM (PRK) ME 102	BREAK	FEM (PRK) S1 THERMAL ENGG LAB II (NG) (NVN) S2		GATE Classes (SC) (ME 103)	
TUESDAY	RAC (NG) ME 301 S1 FEM (PRK) S2	THERMAL ENGG LAB II (NG) (NVN) S1	OR (JIT) ME 301 S2	BREAK	TURBO (NKS) ME 102	CNC (SK) ME 102	GATE Classes (SC) (ME 103)	
WEDNESDAY	OM (ACH) ME 101	FEM (PRK) ME 101	TURBO (NKS) ME 101	BREAK	OR (JIT) ME 101	CNC (SK) ME 101	Wednesday Activity	
THURSDAY	CNC (SK) ME 101	FEM (PRK) ME 101	RAC (NG) ME 101	BREAK	OM (ACH) ME 301	RAC (NG) ME 301	GATE Classes (SC)(ME 103)	
FRIDAY	OR (JIT) ME 103	TURBO (NKS) ME 103	OM (ACH) ME 103	BREAK	PRACTICAL TRG. (DKS)(PS) ME 103		GATE Classes (SC)(ME 103)	
SATURDAY	FEM (PRK) ME 101	RAC (NG) ME 101	TURBO (NKS) ME 101	BREAK	PROJECT STAGE I (PS) (AKD) ME 101		GATE Classes (SC)(ME 103)	

SUB CODE	NAME OF COURSE
7ME1A	Finite Element Methods (FEM)
7ME2A	Refrigeration & Air-conditioning (RAC)
7ME3A	Operations Research (OR)
7ME4A	Turbomachines (TURBO)
7ME5A	Operations Management (OM)
7ME6A.3	CNC Machines and Programming (CNC)
7ME7A	Thermal Engineering Lab-II
7ME8A	Finite Element Method Lab
7METR	Practical Training & Industrial visit
7MEPR	Project-1

INITIALS	NAME OF FACULTY
ACH	ACHIN SRIVASTAV
AKD	AJAY KUMAR DHANOPIA
DKS	DINESH KUMAR SHARMA
JIT	JITENDRA KUMAR
NG	NITIN GOYAL
NKS	NIKHIL SHARMA
NVN	NAVEEN K SAIN
PRK	PRAKASH BHARDWAJ
PS	PRAVEEN SARASWAT
SK	SUNIL KUMAR

DINESH KUMAR SHARMA
NAVEEN KUMAR SAIN
TIME TABLE COORDINATOR

Department of Mechanical Engineering

Mech. Deptt/2017-18/DJ/NT-01 17.07.17

NOTICE

Sub: Organization of GATE Classes for VII Semester Students, Session 2017-18

Dear Students!

As you are already aware that **Graduate Aptitute Test in Engineering (GATE)** is a nationwide yardstick and benchmark to test the academic excellence of an engineering graduate. More importantly, many public sector undertakings such as BHEL, Indian Oil Corporation, NTPC, Bhabha Atomic Research Centre etc. are using the GATE score for selecting candidates for their organizations. By clearing GATE, student may get an admission in M. Tech/MS in IISc / IITs /NITs or Fellow programmes in IIMs and other top-notch universities of the country and abroad as well. He/she is also entitled to get a handsome scholarship of Rs 12,400 per month during the M.Tech course.

In the light of aforesaid information, the Department of Mechanical Engineering, SKIT formally invites registrations for GATE classes for the session 2017-18 from the students VII semesters. Please note the following points in this regard:

1. The schedule of these classes will be in addition to RTU curriculum and will be notified in time-table.
2. These classes will be on optional basis and only for registered students.
3. Resource persons for these classes will be mostly external faculty and some faculty members from deptt. as well.

- ***Interested students should formally register their names for GATE classes to :***
  Mr. Rajendra Singh Chundawat (Mob: 7568929929, His office is on top-floor of deptt.)
  Last date of registration : 19th July, 2017 (Wednesday).

Dheeraj Joshi 17/7/17
Dy. Head (Mech. Engg. Deptt.)

(5)

21 → 30 June

Department of Mechanical Engineering

Sub: GATE Courses and concerned faculty members for Session: 2017-18

27.05.17

Semester	Courses	Faculty members
III	Mechanics of Solids	Dr. Manu Augustine
III	Engineering Thermodynamics	Mr. Sanjay Choudhary
III	Manufacturing Processes	Mr. Vinay Singh Marwal
V	Heat Transfer	Mr. Chandra Mohan Kumar
V	Dynamics of Machines	Mr. Ajay Kumar Dhanopia
V	Measurement & Metrology	Mr. Rahul Saraswat
VII	Refrigeration & Air Conditioning	Mr. Ankit Agarwal
VII	Operations Research	Mr. Manoj Kumar Sain
VII	Turbomachines	Mr. Arun Beniwal

(60)

Note:

1. There will be only one section (named Section-A) for GATE in each semester comprising of motivated students. These students will be selected on discretion of undersigned from GATE attendances and academic performances of students in last academic session.
2. Students will be notified with new sections on
3. In addition to above faculty members, other senior/concerned faculty members will also be requested to deliver lectures for selected topics in GATE sections.

29/5/17

Rajendra Singh Chundawat
(Coordinator-GATE Classes, ME Deptt.)

27/5/17

Dheeraj Joshi
Dy. Head, Mech. Engg. Deptt.

Copy to:

- *Director*
- *Director (Academics)*
- *Mr. Rajendra Singh Chundawat (Coordinator:GATE Classes, ME Deptt.)*
- *All faculty members (via e-mail & Notice file)*
- *Mr. Sheeshram Ola (Coordinator: GATE classes, SKIT)* for Mr. Manoj Meena

NOTE: * Student verification record (to remain in GATE section)
* There may be extra-classes other than scheduled time table of 8:00 - 2:30 PM.
* If you do not maintain 75% at any point of time you are liable to be removed from this list.

Department of Mechanical Engineering
V Semester, Section-A (Session: 2017-18)
GATE SECTION (CUT-OFF 71.5 % in III semester)

REV. 01_10.07.17

S.No	UNIV. ROLL NO	NAME OF STUDENT	Batch	Batch	Date	Sign.
1	14ESKME024	AYUSH TAK ®			10/7/17	Interested Ayush Jain
2	15ESKME015	AMAN BAKOLIYA			11/7/17	Interested - Dheeraj Joshi
3	15ESKME022	ANOP MUNDEL			10/7/17	Interested Anop
4	15ESKME024	ARJUN PATIDAR			12/07/7	Interested Arjun
5	15ESKME029	ASHWANI GUPTA			10-7-17	Interested Ashwani
6	15ESKME035	BHANU PRATAP SINGH			10-7-17	Interested Bhanu
7	15ESKME043	DEVANSH DIXIT			10-7-17	Interested Devansh
8	15ESKME047	DIKSHANT KHEMANI			11-7-17	Interested
9	15ESKME051	DIVYA JAIN			11-7-17	Interested
10	15ESKME052	DUSHYANT KARADIA			10-7-17	Interested Dushyant
11	15ESKME054	GANESH PATEL		A-1	10-7-17	Interested Ganesh
12	15ESKME056	GAURAV MAHESHWARI			11-7-17	Interested
13	15ESKME058	GAURAV SHARMA			11/7/17	Interested Gaurav
14	15ESKME059	GOPAL LAL KURI			11/7/17	Interested गोपाल
15	15ESKME060	GOPAL SHARMA			11/7/17	Interested Gopal
16	15ESKME066	HARSHIT TIWARI			12/7/17	Interested for leaf (Phone)
17	15ESKME068	HIMANSHU PRATAP SINGH RATHORE	TA-1		12/7/17	NOT Interested
18	15ESKME071	HRITVIK SHARMA			12-7-17	Interested. by
19	15ESKME073	INDRAJEET SINGH JADON			12-7-17	Interested (not Interested)
20	15ESKME076	JAIN SAPAN 9784012702				Interested on phone
21	15ESKME079	JAYANT JAIN			11/7/17	NOT Interested Jayant Jain
22	15ESKME084	KESHAV MOT			11/7/17	Interested
23	15ESKME087	KULDEEP SINGH RATHOR			11/7/17	Interested
24	15ESKME088	KUNAL RAO INGALE			11.07.17	Interested
25	15ESKME090	LALIT KUMAR			12.07.17	Interested
26	15ESKME094	MANISH KUMAWAT			11.07.17	Interested Manish
27	15ESKME095	MANOJ DEVANDA			11.07.17	Interested manoj
28	15ESKME098	MAYANK AGGARWAL			11-7-17	Interested
29	15ESKME100	MAYANK KUMAR			11-7-17	Interested
30	15ESKME103	MD IMRAN			11/07/2017	Interested - Md. Imran
31	15ESKME115	NIKHIL KUMAR JAIN			11/07/2017	Interested -
32	15ESKME137	RAHUL SAINI (G.R.M.)		A-2	11/7/2017	Interested
33	15ESKME142	RAJESH KUMAR 8875718558 (10 3)				
34	15ESKME145	RISHABH SAIN			11/7/2017	Interested
35	15ESKME154	SANDEEP SINGH				Interested
36	15ESKME158	SHAILENDRA SARASWAT			11/7/17	Interested Shailendra
37	15ESKME161	SHIWANI			11/7/17	Interested
38	15ESKME174	SUNIL VERMA			11/7/17	Interested Sunil
39	15ESKME179	VANSHDEEP SINGH RATHORE			11/7/17	Interested V.D Singh.
40	15ESKME180	VIKAS GAUR			11/7/17	
41	15ESKME182	VISHAL KUMAR SONI			11/7/17	Interested Vishal Kumar Soni
42	15ESKME183	VISHNU CHEJARA			12/7/17	Interested
43	15ESKME188	YUGANSHU SHARMA			11/7/17	Interested
44	15ESKME300	VISHAL SHARMA (EC to ME) BC				Interested / Vishal
45	15ESKME350	MUZAMMIL PADIYAR (EC to ME) BC			12.7.17	Not Interested for leaf (Phone)
46	15ESKME704	ADITYA JAMER			11.7.17	NOT Interested
47	15ESKME705	ADITYA SINGH JADAUN			10.7.17	NOT Interested
48	15ESKME712	ASHOK KUMAR MALI			12.7.17	NOT Interested
49	15ESKME717	CHIRAG PARIK	TA-2		10.7.17	NOT Interested
50	15ESKME721	DIVYA PANDYA			10-7-17	NOT Interested
51	15ESKME722	DIVYA RAJ SINGH RATHORE			10.7.17	NOT Interested
52	15ESKME723	GARJAN KUMAR PUROHIT			12.7.17	Not Interested for leaf (Phone)
53	15ESKME725	JAYDEEP KHAMESARA			11-7-17	Not Interested
54	15ESKME726	KAMLESH KUMAR		A-3	12-7-17	Interested
55	15ESKME727	KAPIL JETAWAT			10.7.17	NOT Interested
56	15ESKME732	MD FAHAD IQUBAL			12.07.17	Interested for leaf (on Phone)
57	15ESKME734	MOHAN RAM JAT			12-7-17	interested (not Interested)
58	15ESKME736	MUDIT SHARMA			11-7-17	NOT INTERESTED Mohorma
59	15ESKME739	NIMISH SHUKLA			11-7-17	NOT Interested Nimish
60	15ESKME740	PRADHUMN MAHESHWARI			11-7-17	Not Interested
61	15ESKME750	RISHABH SHARMA			12-7-17	Inte.
62	15ESKME753	SHEKHAR SWAMI			11.7.17	NOT INTERESTED Shekhar
63	15ESKME756	SHUBHAM JAIN			11-7-17	NOT INTERESTED Shubham
64	15ESKME760	VISHVANDRA SINGH			11.7.17	NOT INTERESTED Vishwandra

46 interested. I Merit list.

Sheet (1)

Cut-off (% 68.70) V Semester

II Merit List.

Sr No.	University Roll	NAME OF STUDENT	% III Sem
1	14ESKME024	AYUSH TAK ®	68.70%
2	15ESKME006	ADARSH PANSARI	69.60%
3	15ESKME008	AJAY KUMAR BAIRWA	70.30%
4	15ESKME013	AKSHAT GUPTA	70.10%
5	15ESKME015	AMAN BAKOLIYA	76.90%
6	15ESKME022	ANOP MUNDEL	72.10%
7	15ESKME024	ARJUN PATIDAR	74.80%
8	15ESKME029	ASHWANI GUPTA	72.00%
9	15ESKME034	BALDEV SHARMA	68.70%
10	15ESKME035	BHANU PRATAP SINGH	72.00%
11	15ESKME041	DEEPAK NOGIA	69.80%
12	15ESKME043	DEVANSH DIXIT	85.00%
13	15ESKME044	DEVENDRA KUMAR	69.20%
14	15ESKME047	DIKSHANT KHEMANI	74.60%
15	15ESKME051	DIVYA JAIN	77.90%
16	15ESKME052	DUSHYANT KARADIA	72.60%
17	15ESKME054	GANESH PATEL	79.80%
18	15ESKME055	GAURAV DADHICH	70.80%
19	15ESKME056	GAURAV MAHESHWARI	71.90%
20	15ESKME058	GAURAV SHARMA	82.90%
21	15ESKME059	GOPAL LAL KURI	79.50%
22	15ESKME060	GOPAL SHARMA	73.80%
23	15ESKME065	HARSHIT SONI	69.90%
24	15ESKME066	HARSHIT TIWARI	71.50%
25	15ESKME067	HIMANSHU JAIN	69.00%
26	15ESKME069	HITANSHU BHARDWAJ	69.20%
27	15ESKME071	HRITVIK SHARMA	73.10%
28	15ESKME073	INDRAJEET SINGH JADON	77.50%
29	15ESKME076	JAIN SAPAN	73.20%
30	15ESKME078	JASWANT SINGH RAWAT	70.90%
31	15ESKME081	JITENDER KUMAR YADAV	71.20%
32	15ESKME084	KESHAV MOT	76.80%
33	15ESKME087	KULDEEP SINGH RATHOR	74.00%
34	15ESKME088	KUNAL RAO INGALE	72.20%
35	15ESKME089	LAKSHYA YADAV	68.80%
36	15ESKME090	LALIT KUMAR	75.40%
37	15ESKME092	MANISH KUMAR KUMAWAT C	69.50%
38	15ESKME094	MANISH KUMAWAT	74.30%
39	15ESKME095	MANOJ DEVANDA	71.50%
40	15ESKME098	MAYANK AGGARWAL	80.70%
41	15ESKME100	MAYANK KUMAR	72.80%
42	15ESKME103	MD IMRAN	72.20%
43	15ESKME108	MOHIT TAILOR	69.20%
44	15ESKME115	NIKHIL KUMAR JAIN	78.00%
45	15ESKME116	NITESH KUMAR GURJAR	70.10%
46	15ESKME120	OJJ PRATAP VERMA	70.70%
47	15ESKME137	RAHUL SAINI (G.R.M.)	72.20%
48	15ESKME142	RAJESH KUMAR	73.40%
49	15ESKME145	RISHABH SAIN	72.00%
50	15ESKME154	SANDEEP SINGH	74.90%
51	15ESKME158	SHAILENDRA SARASWAT	75.00%
52	15ESKME161	SHIWANI	77.70%
53	15ESKME164	SHUBHAM GOYAL	68.70%
54	15ESKME174	SUNIL VERMA	77.30%
55	15ESKME175	SURESH KUMAR NAGARWAL	69.70%
56	15ESKME177	TARUN JAIN	69.10%
57	15ESKME179	VANSHDEEP SINGH RATHORE	71.50%
58	15ESKME180	VIKAS GAUR	75.00%
59	15ESKME181	VISHAD TAILOR S	69.00%
60	15ESKME182	VISHAL KUMAR SONI	71.90%
61	15ESKME183	VISHNU CHEJARA	76.70%
62	15ESKME188	YUGANSHU SHARMA	75.90%
63	15ESKME300	VISHAL SHARMA (EC to ME) BC	77.90%
64	15ESKME351	MIHIR VIJAYVARGIYA (EC to ME) BC	69.30%
65	15ESKME720	DIGVIJAY SINGH	69.20%
66	15ESKME726	KAMLESH KUMAR	81.30%
67	15ESKME732	MD FAHAD IQUBAL	71.50%
68	15ESKME734	MOHAN RAM JAT	79.30%
69	15ESKME749	RAVI CHOUDHARY	69.60%
70	15ESKME750	RISHABH SHARMA	72.80%
71	15ESKME754	SHIVANKUR SHARMA	71.40%
72	15ESKME758	UDIT KUMAR CHAWLA	69.10%

Not Interested
Interested
Not Interested
Not interested Baldev Sharma
Interested Deepak Nogia
Not interested
8385037175/9610222946
Interested
Not Interested
Not Interested
Not Interested
Interested Jaswant
Interested Jitender Not Interested
Not Interested Lakshya
9636017030
Not Interested
Interested
Not interested
Not Interested
Interested Suresh
Interested Tarun Jain
7877085286 Not attended
INTERESTED Mihir
NOT INTERESTED
Interested for key
Not interested
Not interested

13.7.17.

List of new entries in GATE Section.

Sr No.	University Roll No.	NAME OF STUDENT	% III Sem	Confirmation.
1	15ESKME007	ADITYA SONI B	67.20%	Not interested
2	15ESKME020	ANKIT SAIN B	68.30%	interested Ankit Sain
3	15ESKME046	DHIRAJ KUMAR MISHRA B	67.60%	interested Dhiraj M
4	15ESKME053	FARHAN KHAN B	68.00%	Not interested Farhan
5	15ESKME062	GOVIND RAM KUMAWAT B	67.20%	interested
6	15ESKME075	JAI PRAKASH SAINI — B	67.30%	~~for Not~~ Interested
7	15ESKME083	KARANVEER SINGH RATHORE - B	67.90%	Interested (Key) for ME 105
8	15ESKME125	PIYUSH AGARWAL — C	67.00%	Interested
9	15ESKME127	PRAGYA KHANDAL — C	68.40%	not Interested Khandal
10	15ESKME138	RAHUL SAINI (V.K.S.) C	67.80%	Interested ✓ for
11	15ESKME144	RAVI RANJAN KUMAR C	67.90%	Not Interest
12	15ESKME159	SHAILENDRA SINGH BHATI C	68.40%	Omit (Interested)
13	15ESKME168	SHUBHAM SHRIMAL C	67.90%	Not interested Shubham
14	15ESKME701	ABHAY CHAUHAN S	67.90%	Not Interested Abhay Chauhan
15	15ESKME715	BHAV MATHUR S	67.70%	Not Interested bhm.
16	15ESKME738	NEMISH BHATT S	67.20%	(Not Interested) ME-301
17	15ESKME746	RAJAT X S	68.20%	(Not attended GATE Class
18	15ESKME752	SAMPAT SINGH RAWAT S	68.50%	interested Sampat
19	16ESKME206	SHAIKH MOHAMMED KHALID (D) S	67.80%	

FM fab

III Merit List

Students' Confirmation.

I Merit list for GATE Section.

Department of Mechanical Engineering
III Semester, Section-A (Session: 2017-18)
GATE SECTION (CUT-OFF 72.7 % in I semester)

STUDENT VERIFICATION SHEET REV. 00_10.07.17

S. No	Roll No.	Name of Student	Remarks & Signatures	
1	16ESKME005	ABHISHEK SHARMA (M.K.S.)	interested	Asharma
2	16ESKME012	AKHIL NAIR	Not interested	
3	16ESKME028	ANITA SHARMA	Not interested.	
4	16ESKME040	ASHWINI KUMAR JANGID	interested	Ashwini
5	16ESKME045	CHANDAN KUMAR PRAJAPATI	Not interested	Chanda
6	16ESKME049	DEEPAK SHARMA (A.K.S.)	interested	Deepak
7	16ESKME051	DEEPANSHU SAINI	interested	Deepanshu
8	16ESKME053	DEEPESH GUPTA	interested	Deepesh
9	16ESKME066	GHANISTH YADAV	interested	Ghanisth.
10	16ESKME067	HARDIK MEHTA	interested	Hardik
11	16ESKME069	HARSH KUMAR VERMA	Interested	Harsha
12	16ESKME076	JAYESH CHHABRA	Interested	
13	16ESKME078	K VARDHRAJAN	Interested	Intarda
14	16ESKME080	KAVITOSH SHARMA	Intrested	Ksharma
15	16ESKME081	KULDEEP SINGH	Intrested	
16	16ESKME082	KUNAL ADVANI	Intrested	
17	16ESKME084	LAKSHYA KHANDELWAL	Interested	Lakshy
18	16ESKME087	LAVISH JAIN	interested	Lavish
19	16ESKME088	LOKESH KUMAR JAT	interested	Lokesh
20	16ESKME089	MAHIPAL CHOUDHARY	interested	Mahipal
21	16ESKME091	MAYANK CHOUDHARY	Interested	
22	16ESKME092	MAYANK GUPTA	interested	Mgupta
23	16ESKME104	MOHIT TIWARI	Interested	Mohit Tiwari
24	16ESKME106	MUDIT BHARDWAJ	Intrested	Mudit
25	16ESKME127	PRATEEK CHOUDHARY	Interested	Prateek
26	16ESKME131	PRITAM MANNA	Interested	
27	16ESKME132	PRIYANSHU	Interested	for test (Phone)
28	~~16ESKME133~~	~~PUNDRIKAKSH JOSHI~~	left College	
29	16ESKME143	RISHABH RAO	Not Interested	for test (Phone)
30	16ESKME145	ROHIT SABDHANI	Interested	for test (Phone)
31	16ESKME146	RONAK AGARWAL	Not Interested	Ronak
32	16ESKME153	SANJEEV KUMAR	Interested	Sanjeev Kumar
33	16ESKME156	SHIVANSH OGALE		9521605432
34	16ESKME158	SHUBHAM JAIN	Interested	
35	16ESKME160	SHUBHAM RATHORE	Not Interested	Shubham
36	16ESKME172	TIRUPATI SINGH	Interested	Tsingh
37	16ESKME176	VEERENDRA SINGH	Interested	for test (Phone)
38	16ESKME177	VIJAY KUMAR SHARMA	Interested	vijay
39	16ESKME180	VIPIN MUNDRA	Interested	Vipin
40	16ESKME184	YOGESH KUMAR	interested	Yogesh
41	16ESKME701	ABHISHEK GARG	Interested	Abhishek G
42	16ESKME703	ABIR BERA	Interested	Abir
43	16ESKME705	AMAN GOYAL	Interested	for test (Phone)
44	16ESKME706	AMAN SINHA	Interested	
45	16ESKME711	DEEPAK KUMAR KHANDELWAL	Interested	Deepak Khadelwal
46	16ESKME713	GOURAV BAHETI	Interested	Gaurav
47	16ESKME714	HARSHIKESH KUMAR	Interested	Harshikesh Kumar
48	16ESKME717	HEMANT SONI	Interested	Hemant
49	16ESKME719	HIMANSHU GUPTA	Interested	for test (Ph) 9783050195
50	16ESKME724	MAHIPAL YADAV	Interested	Mahipal
51	16ESKME725	MAYANK GUPTA	Interested	Mgupta
52	16ESKME738	RAVI KUMAR	Interested	Ravi Kumar
53	16ESKME740	SACHIN SHARMA	interested	
54	16ESKME745	SHIVAM CHOUDHARY	Interested	Shivam
55	16ESKME747	SIDDHANT PACHOURI	Interested	Siddhant
56	16ESKME750	SOURABH DUDANI	Interested	Sourabh
57	16ESKME753	UTKARSH GAUR	Interested	Utkarsh
58	16ESKME754	VISHNU DUTTA	~~Not Interested~~	
59	16ESKME756	YASH PANCHARIA	Interested	Yash
60	16ESKME757	YASH PANDEY	Intersted	Yash Pandey

Branch changed students

16ESKEE006 Abhishek Bradhan Interested

16ESKEC001 Aakash Sharma ~~Not~~ Interested

16ESKEC029 Gaurav Gupta ~~Not~~ Interested

16ESKEC719 Kuldeep Singh. Interested

III sem. II Merit list.

Confirmation Sheet for GATE section (Cut-off - 71.2%)

Sr. No	Roll No.	Name of Student	% I Sem	Interested/Not Interested	Sign.
1C3	16ESKEE090	PULKIT JAIN (EE to ME)	0.718	Not Interested	Pulkit Jain → 15.7.17
2B-1	16ESKME021	AMAN PANKAJ	0.723	Interested	Aman
3B-1	16ESKME022	AMAN SINGHAL	0.722	Interested	Aman
4B-2	16ESKME025	ANIKET RATHORE	0.719	Interested	Aniket
5B-2	16ESKME033	ARUN THAKURATHI	0.713	Interested	Arun
6B-2	16ESKME046	CHINMAY TRIVEDI	0.72	Not Interested	Chint.
7B-3	16ESKME062	GAURAV CHAUDHARY	0.719	Not interested	Gaurav
8B-3	16ESKME063	GAURAV J BEDI	0.717	Interested	Gaurav
9B-3	16ESKME068	HARSH BARGOTA	0.726	Interested	Har
10B-3	16ESKME073	HARSHIT TIWARI	0.725	Interested	Harshit
1C-1	16ESKME077	JAYESH MALVIYA	0.714	Interested	Jayesh
2C-1	16ESKME086	LAKSHYA SHARMA	0.712	Not Interested	(Phone)
13C-1	16ESKME100	MOHIT KUMAR PAREEK	0.718	Not Interested	Mohit Pareek
14C-2	16ESKME108	MUKUL PICHUNIA	0.712	Not Interested	Mukul Pichunia
15C-2	16ESKME118	PAWAN SAINI	0.724	Interested	Pawan Saini
16C-2	16ESKME122	PRAKHAR JAIN	0.713	Not Interested	Prakhar
17C-2	16ESKME126	PRASHANT GUPTA	0.716	Interested	Prashant Gupta
18C-3	16ESKME147	RONAK PANCHAL	0.718	Interested	Ronak Panchal
* 19C-3	16ESKME148	RUCHI JAISWAL	0.717	Not Interested	(Elec. B.)
20C-3	16ESKME152	SAKET KHANDELWAL	0.715	Not Interested	Saket
21S-2	16ESKME729	NIHAL TIWARI	0.715	Interested	(Phone)
22S-3	16ESKME741	SACHIN YADAV	0.712	Interested	Sachin

64+22=86. ✓ (17)

69 ✓✓

(69)

204	16ESKME723	KAUSTAV BHATTACHARYA	0.636	
207	16ESKME726	MOHIT FUMTIYA	0.687	
208	16ESKME727	NAYAN GUPTA	0.639	
209	16ESKME728	NEERAJ PRATAP SINGH RATHORE	0.663	
210	16ESKME729	NIHAL TIWARI	0.715	
211	16ESKME730	NIRMAL LOHAR	0.633	
212	16ESKME731	NISHIL SAINI	0.631	
213	16ESKME732	POOJA SANGTANI	0.655	
214	16ESKME733	PRAVEG SHAHI	0.511	
215	16ESKME734	PUNEET SHIAGH	0.225	
216	16ESKME735	PUSHKAR DANGI	0.548	
217	16ESKME736	RAGHAV KANKANI	0.657	
218	16ESKME737	RAHUL JAIN	0.449	
220	16ESKME739	ROHIT JANGID	0.702	
222	16ESKME741	SACHIN YADAV	0.712	
223	16ESKME742	SATYAM KUMAR	0.603	
224	16ESKME743	SAWAN TAKEWAL	0.688	
225	16ESKME744	SHANTANU TIWARI	0.701	
228	16ESKME748	SIDDHANT RAI SHARMA	0.652	
230	16ESKME751	SUSHANT BESRA	0.597	
231	16ESKME752	TEJENDRA SINGH RATHOR	0.681	
234	16ESKME755	VISHWAS SHARMA	0.662	
181	16ESKCE071	NISHANT DIWAKER (CE to ME)	0.708	S
240	16ESKCS760	VISHAL CHUNLETIA (CS to ME)	0.68	S
178	16ESKEC001	AAKASH SHARMA (EC to ME) ✓	0.792	A3
180	16ESKEC029	GAURAV GUPTA (EC to ME) ✓	0.772	A3
237	16ESKEC719	KULDEEP SINGH (EC to ME) ✓	0.789	A3
238	16ESKEC732	RAJESH H (EC to ME)	0.64	S
239	16ESKEC736	SHASHIKANT YADAV (EC to ME)	0.710	C3
179	16ESKEE006	ABHISHEK PRADHAN (EE to ME) ✓	0.726	A3
182	16ESKEE090	PULKIT JAIN (EE to ME)	0.718	C3

III Sem.

Branch changed students.

Not interested 15.7.17.

* Only Interested students need to attend GATE classes. (These classes are other than RTU curriculum).

w.e.f. 17.7.17.

GATE Registration Sheet

Department of Mechanical Engineering, SKIT

VII Semester, Section-A, Session 2017-18

17.7.17.

Sr. No	University Roll No.	NAME OF STUDENT	Interested / Not Interested	Sign.
1	14ESKME001	AASHISH JHA 22/07 24/07		
2	14ESKME002	AASHISH PUROHIT	Intrested	Aashish.
3	14ESKME003	ABHISHEK JAIN		
4	14ESKME004	ABHISHEK SHARMA		
5	14ESKME005	ADITYA SINGH		
6	14ESKME006	AJAY KUMAR		
7	14ESKME007	AKASH KAUSHIK		
8	14ESKME008	AKSHAY MAHESHWARI		
9	14ESKME009	ALI JAFFAR SHERIFF		
10	14ESKME010	AMAN GUPTA		
11	14ESKME011	ANAND KUMAR	Intrested.	
12	14ESKME012	ANIRUDDH SINGH		
13	14ESKME013	ANKIT KUMAR AGRAWAL	Interested	Ankit
14	14ESKME014	ANKUR MITTAL	Interest	Ankur
15	14ESKME015	ANKUR YADAV	Interested	
16	14ESKME016	ANSHUL MAHESHWARI		
17	14ESKME017	ANSHUL NAHAR		
18	14ESKME018	ANUJ MITTAL		
19	14ESKME019	ANUP BHARADIA		
20	14ESKME021	ANURAG SINGH	Interested	
21	14ESKME022	ARUN KUMAR KUMAWAT	Interested	Arun
22	14ESKME023	ASHOK SAINI		
23	14ESKME025	BABU LAL MUNDEL		
24	14ESKME026	BHANUPRATAP SINGH HADA		
25	14ESKME027	BHARAT DAS		
26	14ESKME028	CHANDRAVEER SINGH		
27	14ESKME029	CHETAN KUMAR AGRAWAL		
28	14ESKME030	CHIRAG VADARA	Interested	
29	14ESKME031	DEEPANSH MATHUR		
30	14ESKME032	DEEPESH KUMAR AGRAWAL	Interested	
31	14ESKME033	DHANRAJ CHOUDHARY		
32	14ESKME034	DINESH CHOUDHARY		
33	14ESKME035	DIPTADEEP CHANDRA	Interested	
34	14ESKME036	DUSHYANT ACHARYA		
35	14ESKME037	GAJENDER SINGH	Interested	
36	14ESKME038	GOPAL SINGH		
37	14ESKME039	GOURAV JAIN		
38	14ESKME040	GOURAV MAHERA		
39	14ESKME041	GURKIRT SINGH		
40	14ESKME042	HARISH BAIRWA		
41	14ESKME043	HARISH KUMAR		
42	14ESKME044	HARSH VARDHAN SINGH CHUNDAWAT		
43	14ESKME045	HIMANSHU GOYAL	Interested	Himanshu Goyal
44	14ESKME046	HIMANSHU PARMAR		
45	14ESKME048	JEETENDRA KUMAR		
46	14ESKME049	JEETU RAM CHOUDHARY		
47	14ESKME050	JITENDRA SINGH CHOUHAN	Interested	
48	14ESKME051	KARAN YADAV		
49	14ESKME052	KAVISH SHARMA		
50	14ESKME053	KOSHAL KISHOR NAGAR		
51	14ESKME054	KRISHAN KUMAR		
52	14ESKME055	LOKESH UPADHYAY		
53	14ESKME056	MAHENDRA CHOUDHARY	Interested	Mahendra
54	14ESKME057	MAHESH KUMAR CHOUDHARY		
55	14ESKME058	MAYANK MISHRA	Interested	Mayank
56	14ESKME059	MAYANK SHASHI		
57	14ESKME060	MIHIR TRIPATHI		
58	14ESKME061	MOHAMMAD AKRAM		
59	14ESKME062	MOHAMMED ANAS KHAN		
60	14ESKME063	MOHIT KUMBHAT		
61	14ESKME064	MRIDUL VERMA		
62	14ESKME065	MUKESH KUMAR		
63	14ESKME066	MURARI KUMAR		
64	14ESKME067	NAMAN CHOUDHARY	Interested	
65	14ESKME068	NAMAN TOLAMBIYA		
66	14ESKME069	NAVIN KUMAR		
67	14ESKME070	NAVNEET OLLA		
68	14ESKME071	NIKHIL JAIN	Interested	
69	14ESKME072	NIKHIL SHARMA	Interested	Nikhil
70	14ESKME073	NISHANK GARG		
71	14ESKME074	PANKAJ KUMAR		
72	14ESKME075	PARAG JAIN		
73	14ESKME076	PRABHAKAR DANDOTIYA		
74	14ESKME077	PRADEEP KUMAR CHAUHAN		

GATE Registration Sheet
Department of Mechanical Engineering, SKIT
VII Semester, Section-B, Session 2017-18

Sr. No	University Roll No.	NAME OF STUDENT	Interested / Not Interested	Sign.
1	14ESKME078	PRAKHER KHANNA 22/07 24/07		
2	14ESKME079	PRANAY VYAS		
3	14ESKME080	PRATEEK CHOUDHARY		
4	14ESKME081	PRAVEEN CHOUHAN		
5	14ESKME082	PUROHIT NITIN SAWAISINGH		
6	14ESKME083	PUSHPENDRA KHUNTWAL	Interested	
7	14ESKME084	RAGHAV SHARMA		
8	14ESKME085	RAHUL JANGID		
9	14ESKME086	RAHUL KUMAR JAIN		
10	14ESKME087	RAHUL PARTAP SINGH		
11	14ESKME088	RAHUL SHARMA		
12	14ESKME089	RAJ JUNWAL		
13	14ESKME090	RAJAT MATHUR		
14	14ESKME091	RAJEEV RATNA SINGH		
15	14ESKME093	RAVI SINGH		
16	14ESKME094	RAVINDRA SHARMA	Interested	
17	14ESKME095	RAVITA SINGH		
18	14ESKME096	RITESH KUMAR JHA		
19	14ESKME097	RITESH KUMAR SINGH		
20	14ESKME098	SACHIN PATEL		
21	14ESKME099	SAKET BISHNOI		
22	14ESKME100	SANDEEP KUMAR KUMAWAT		
23	14ESKME101	SANJAY MOD		
24	14ESKME102	SHIVA GURJAR	Interested	
25	14ESKME103	SHIVDUTT ACHARYA		
26	14ESKME104	SHUBHAM KUMAR SINGH	Interested	
27	14ESKME105	SHUBHAM PANDEY		
28	14ESKME106	SHUBHAM PITALIYA		
29	14ESKME107	SHUBHAM SONI		
30	14ESKME108	SIDDHARTH SHARMA		
31	14ESKME109	SONU KUMAR		
32	14ESKME110	SUMER SINGH CHAUHAN		
33	14ESKME111	SUNIL KUMAR		
34	14ESKME112	SURAJ KUMAR		
35	14ESKME113	TANMAY OJHA		
36	14ESKME114	TUSHAR VASHISHTH		
37	14ESKME115	VATSAL SHARMA		
38	14ESKME116	VIJAY KUMAR SAHOO		
39	14ESKME117	VIJENDRA CHOUDHARY		
40	14ESKME118	VIKASH BHADVA		
41	14ESKME119	VINAY KUMAR		
42	14ESKME120	VIPUL AGARWAL		
43	14ESKME121	VIPUL GUPTA		
44	14ESKME122	VISHAL SINGH		
45	14ESKME123	YADUVEER SINGH JADAWAT		
46	14ESKME124	YASH PAREEK		
47	14ESKME125	YOGESH YADAV		
48	14ESKME301	DHAVAL CHANCHAWAT (EE to ME) BC		
49	14ESKME303	DEEPAK KATARIA (EC to ME) BC		
50	14ESKME302	RAKSHIT BHANDARI (IT to ME) BC		
51	14ESKME300	RAMNARAYAN SHARMA (EC to ME) BC	Interested	
52	15ESKME200	AGRAJ VAISHNAV (LEEP)		
53	15ESKME201	DEVENDRA SINGH (LEEP)		
54	15ESKME202	HARISH BHATI (LEEP)		
55	15ESKME203	PAWAN SHARMA (LEEP)		
56	15ESKME204	RAHUL SHAHI (LEEP)		
57	15ESKME205	RAWAT PRATEEK SINGH (LEEP)		

GATE Registration Sheet
Department of Mechanical Engineering, SKIT
VII Semester, Section-S, Session 2017-18

Sr. No	University Roll No.	NAME OF STUDENT	Interested / Not Interested	Sign.
1	14ESKME701	AAYUSH SHARMA 22/07 24/07		
2	14ESKME702	ABHISHEK PATEL		
3	14ESKME703	ABHISHEK WADHERA		
4	14ESKME704	AKASH ATREYA	Interested.	Akash.
5	14ESKME705	AMAN KUMAR		
6	14ESKME706	AMIT TOLMBIA		
7	14ESKME707	ANSHUMAN SINGH PARMAR	Interested	Anshuman
8	14ESKME708	ANUP KUMAR		
9	14ESKME709	BADAL		
10	14ESKME710	BRAJ MOHAN SHARMA		
11	14ESKME711	CHIRAYU JAIN	Interested	Chirayu
12	14ESKME712	DEEPAK KUMAR PRAJAPAT	Interested	Deepak
13	14ESKME713	DEVSHEKHAR GOYAL		
14	14ESKME715	GANGA PRASAD GUPTA	Interested	Ganga Prasad
15	14ESKME716	GARVIT TOLAMBIA		
16	14ESKME717	GAURAV ARORA	Gaurav Interested	Gaurav
17	14ESKME718	GAURAV SHARMA	Interested	
18	14ESKME719	HARSHIT OJHA		
19	14ESKME720	HARSHVARDHAN SINGH SHEKHAWAT		
20	14ESKME721	HIMANSHU		
21	14ESKME722	JAY VYAS	Interested	Jayvyas
22	14ESKME723	KAMAL KASANA	Interested	Kamal Kasana
23	14ESKME724	KESHAV MEENA		
24	14ESKME725	KETAN JAIN	Interested	Ketan Jain
25	14ESKME726	KRISHNA KANT GOYAL		
26	14ESKME727	LOVE KHATOD		
27	14ESKME728	MAHENDRA SHARMA	Interested	Mahendra
28	14ESKME729	MAHESH KUMAR SAINI	Interested	Mahesh
29	14ESKME730	MD NUMER AHMAD		
30	14ESKME731	MOHIT KUMAWAT		
31	14ESKME732	MOHMAAD ARSHAD MANSOORI		
32	14ESKME733	NIKESH KUMAR VAISHNAV		
33	14ESKME734	NIKHIL BHARDWAJ		
34	14ESKME735	NISHANT DIXIT		
35	14ESKME736	PINGAKSHA DWIVEDI	In "	P. Dwivedi
36	14ESKME737	PRANJAL MAHESHWARI		
37	14ESKME738	PRANSHU YOGI		
38	14ESKME739	PUNEET SINGH		
39	14ESKME741	RAJAT CHOUDHARY		
40	14ESKME742	RAJESH GUPTA		
41	14ESKME744	RANJEEV KUMAR		
42	14ESKME745	ROCHAK CHOUBISA		
43	14ESKME746	ROHITASH PAREEK	Interested.	
44	14ESKME747	SAGAR KHANDELWAL	Sagar Khandelwal Interested.	Sagar Khandelwal
45	14ESKME748	SAGAR SHARMA	Interested	
46	14ESKME749	SAHARSH VASHISHTHA	Interested	Saharsh Vashishtha
47	14ESKME750	SAHIL AGGRWAL	Intrested	Sahil
48	14ESKME751	SARAVAN KUMAR		
49	14ESKME752	SHUBH AGARWAL		
50	14ESKME753	SIDDHARTH RATHORE		
51	14ESKME754	TEJENDRA BADIWAL		Tejendra
52	14ESKME755	VAIBHAV BIRLA	Interested	
53	14ESKME756	VAIBHAV VYAS	"	
54	14ESKME758	VIKAS MEENA		
55	14ESKME759	VISHESH		
56	14ESKME760	YASH KUMAWAT		
57	14ESKME761	YASH RAJ MATHUR		
58	14ESKME762	YASHWANT TAILOR		
59	14ESKME763	YOGESH KUMAWAT		
60	14ESKME351	AMIT KUMAR JANGID (CS to ME) BC		
61	14ESKME352	ANANT KAPOOR (EE to ME) BC		
62	14ESKME353	ANISHA SONI (EC to ME) BC		
63	14ESKME350	SATYA PRAKASH (EC to ME) BC		

Swami Keshvanand Institute of Technology, Management & Gramothan
Department of Mechanical Engineering

06.12.16

Attention: IV and VI Semester Students (Jan-June 2017)

The Department welcomes you all in the new semester with greater zeal and fervor!

It is evident that Graduate Aptitude Test in Engineering (GATE) is one of the most prestigious competitive examinations in India especially for the students of core branches of engineering like Mechanical, Electrical and Civil Engineering. GATE score of a candidate is used by several public sector undertakings (PSUs) (i.e., government-owned companies) for recruiting graduate engineers in entry-level positions, to get Fellowship Programs from CSIR and Scholarships in ME/ M.Tech from IITs/NITs/other Engg. colleges like ours and many more. Even some private companies have started asking GATE score.

In the above context, to help you crack the GATE examination with flying colours, Department will offer GATE classes for the IV and VI semester students of session 2016-17 in the following courses with the normal RTU syllabus. These are the courses in which a fairly good number of questions are asked in GATE and other competitive examinations.

IV Semester:

- Kinematics of Machines (4 ME 1A)
- Fluid Mechanics & Machines (4 ME 2A)

VI Semester

- Vibration Engineering (6ME 4A)
- Steam Engineering (6 ME 5A)

Important Points to note

1. **Students of IV and VI semester who are interested in such (GATE+RTU) classes should register for the same in the office of Mr. Pushpendra Singh (PA, Head, Mech. Engg. Deptt.) latest by 10 January, 2016.**
2. The registered students in each semester will be placed in a new section (one or two sections G-1, G-2 depending upon the number of registered students).
3. The classes of this section will be conducted as per usual time-table for the semester. However, there will be in-depth course coverage with special focus on GATE and other competitive examinations.
4. Sometimes, these classes may run even upto 3:30 PM as per the discretion and requirement of the faculty member administering these classes.
5. As these classes will be for GATE+RTU, attendance will be counted as per usual rules.
6. No change will be permitted after a decision has been made by a student.

For further clarifications, you may contact the undersigned.

6/12/16

Dheeraj Joshi
Dy. Head, Mech. Engg. Deptt.

Mr. Sheesh Ram Ola : 9602824001
Faculty (Electrical Deptt.)

DEPARTMENT OF MECHANICAL ENGINEERING

GATE CLASS TIME TABLE- Session (2016-17)

DAY	TIME	VENUE
MONDAY	1:30-3:30 PM	ME-103/ Meghnad Saha Seminar Hall
TUESDAY	1:30-3:30 PM	ME-103/ Meghnad Saha Seminar Hall
WEDNESDAY	12:30-3:30 PM	ME-103/ Meghnad Saha Seminar Hall
THURSDAY	1:30-3:30 PM	ME-103/ Meghnad Saha Seminar Hall
FRIDAY	12:30-3:30 PM	ME-103/ Meghnad Saha Seminar Hall
SATURDAY	12:30-3:30 PM	ME-103/ Meghnad Saha Seminar Hall

Dheeraj Joshi

Coordinator_GATE Classes (2016-17)

Note:

* GATE classes are over for this semester by Mr. Suresh Choudhary as 'Resource Person.
* The details are as attached herewith.

- Dheeraj Joshi
20/4/17.
(Coordinator : GATE-2016-17)

(COURSE COVERAGE)

Department of Mechanical Engineering

Sub: Progress Report on GATE Classes 2016-17

Session No.	Date	Timings & venue	No. of Students Present	Topics Covered (Please mention in detail)	Name & Signature of resource Person
1.	6.3.17	1:30 PM onwards ME-103	72	Orientation, General Introduction about GATE	Suresh Choudhary (Sh)
2.	7.3.17	1:30 PM onwards ME-103	108+4 = 112	Fluid & fluid properties, T v/s ($\frac{du}{dt}$), μ v/s ($\frac{du}{dy}$) Curves.	Suresh Choudhary (Sh)
3.	8.3.17	12:30 PM onwards (ME Seminar Hall)	115	Different types of fluids Surface tension, Capillarity	Suresh Choudhary (Sh)
4.	9.3.17	1:30 PM (ME-Seminar)	106	Pressure & pressure Measurement	Suresh Choudhary (Sh)
5.	10.3.17	12:30 PM (ME seminar)	112	Problem class: problems on Surface tension, capillarity & pressure	Suresh Choudhary (Sh)
6.	11.3.17	12:30 PM ME Seminar	89	Pressure forces on plane and Curved Surfaces	Suresh Choudhary (Sh)
7.	14.3.17	1:30 PM ME Seminar Hall	47	KOM – Simple mechanism, Kinematic link, Pair etc.	Suresh Choudhary (Sh)
8.	15.3.17	12:30 PM Room 102, ME	87	Degree of freedom, four bar chain mechanism	Suresh Choudhary (Sh)
9.	16.3.17	1:30 P.M Seminar Hall	117	Single slider crank chain mechanism	Suresh Choudhary (Sh)
10	18.3.17	12:30 – Seminar Hall.	85	Double slider crank chain mechanism, velocity Analysis	Suresh Choudhary (Sh)
11	20.3.17	1:30 – Seminar Hall	118	Relative velocity method.	Suresh Choudhary (Sh)

Mr. Dheeraj Joshi
Mr. Rajendra Singh Chundawat
(Coordinator's_GATE Classes 2016-17)

Department of Mechanical Engineering

Sub: Progress Report on GATE Classes 2016-17

Session No.	Date	Timings	No. of Students Present	Topics Covered (Please mention in detail)	Name & Signature of resource Person
12.	21.03.17	1:30 – Seminar Hall.	121	Problem on 1st Chapter of ROM.	Suresh Choudhary (SC)
13.	22.03.17	12:30 – 2:30 102, ME	95	Arranged by Rajendra Sir	Suresh Choudhary (SC)
14.	23.03.17	1:30 – Seminar Hall, ME	122	Fluid Dynamics, Bernoulli's equation	Suresh Choudhary (SC)
15.	24.03.17	12:30 – Seminar Hall, ME	120	Flow Measurement Devices, Venturimeter, Pitot tube	Suresh Choudhary (SC)
16.	25.03.17	12:30 – Seminar Hall, ME	123	Laminar flow through pipes	Suresh Choudhary (SC)
17.	27/03	1:30 – Seminar Hall	1 –	Introduction to Cams, types of Cams & followers.	Suresh Choudhary (SC)
18.	28.03	1:30 – Seminar Hall	124	Different types of follower Motions	Suresh Choudhary (SC)
19.	29.03	12:30 – 3:30	121	Cam profile (Draw)	Suresh Choudhary (SC)
20.	30.03	1:30 – 3:30pm	125	Brakes, Shoe brake	Suresh Choudhary (SC)
21.	31.03	12:30 – 3:30	120	Band Brake, Block & Band Brake	Suresh Choudhary (SC)
22.	01.04	12:30 – 3:30	126	Numerical on Brake,	Suresh Choudhary (SC)

Mr. Dheeraj Joshi
Mr. Rajendra Singh Chundawat
(Coordinators_GATE Classes 2016-17)

Department of Mechanical Engineering

Sub: Progress Report on GATE Classes 2016-17

Session No.	Date	Timings	No. of Students Present	Topics Covered (Please mention in detail)	Name & Signature of resource Person
23.	3.04.17	1:30-3:30 pm	116	Friction, Angle of friction Angle of repose	Suresh Choudhary
24.	5.04.17	12:30-3:30 pm	112	Inclined Plane - Motion up & down the plane, screw thread	Suresh Choudhary
25.	6.04.17	1:30-3:30		Efficiency of screw jack	Suresh Choudhary
26.	7.04	12:30-3:30		Laminar flow.	Suresh Choudhary
27.	8.04	12:30-3:30		Turbulent flow	Suresh Choudhary
28.	10.04	1:30-3:30		Turbulent flow	Suresh Choudhary
29.	11.04	1:30-3:30		Flow through pipes	Suresh Choudhary
30.	12.04	12:30-3:30		Flow through pipes	Suresh Choudhary
31.	13.04	1:30-3:30		Concept of tangential & Radial flow runner	Suresh Choudhary
32.	14.04	12:30-3:30		Impulse turbine Pelton turbine	Suresh Choudhary
33.	15.04	12:30-3:30		Radial flow turbines Francis Turbine	Suresh Choudhary
34.	17.04	1:30-3:30		Kaplan & propeller Turbine	Suresh
35.	18.04	1:30-3:30		Draft tube Theory	Suresh Choudhary

Mr. Dheeraj Joshi
Mr. Rajendra Singh Chundawat
(Coordinators_GATE Classes 2016-17)

SHEET - (1)

Faculty: { Dheeraj Joshi, Rajendra Singh.

DEPARTMENT OF MECHANICAL ENGINEERING

RECORD OF ATTENDANCE OF GATE SESSIONS (IV Sem-Session Jan-June 2017)

S.No.	ROLL NO	NAME OF STUDENT	06/3/17	07/3/17	08/3/17	09/3/17	10/3/17	11/3/17	14/3/17	15/3/17
	GATE REGISTERED STUDENTS (SEC-A)									
1	14ESKME024	AYUSH TAK ®	Ayush	Ayush	Ayush	Ayush	Ayush	Ayush	AB	AB
2	15ESKME003	ABHISHEK PALIWAL	Abhishek	Abhishek	Abhishek	Abhishek	Abhishek	Abhishek	Abhishek	Abhishek
3	15ESKME004	ABHISHEK TINKER	Abhishek	Abhishek	Abhishek	Abhishek	Abhishek	Abhishek	AB	AB
4	15ESKME006	ADARSH PANSARI	Adarsh	Adarsh	Adarsh	Adarsh	Adarsh	Adarsh	AB	Adarsh
5	15ESKME008	AJAY KUMAR BAIRWA	Ajay	Ajay	Ajay	Ajay	Ajay	Ajay	Ajay	Ajay
6	15ESKME009	AJAY TAWANIA	Ajay	Ajay	Ajay	Ajay	Ajay	AB	AB	AB
7	15ESKME018	ANAY MATHUR	Anay	Anay	Anay	Anay	Anay	Anay	Anay	[illegible]
8	15ESKME020	ANKIT SAIN	Ankit	Ankit	Ankit	Ankit	Ankit	Ankit	Ankit Sain	Ankit Sain
9	15ESKME021	ANKUR SHARMA	Ankur	Ankur	Ankur	Ankur	Ankur	Ankur	Ankur	Ankur
10	15ESKME022	ANOP MUNDEL	Anop	Anop	Anop	Anop	Anop	Anop	Anop	Anop
11	15ESKME023	ARENDRA SINGH	Arendra	Arendra	Arendra	Arendra	Arendra	Arendra	AB	AB
12	15ESKME024	ARJUN PATIDAR	Arjun	Arjun	Arjun	Arjun	Arjun	Arjun	AB	Arjun
13	15ESKME025	ARUN MAHAWAR	Arun	Arun	Arun	Arun	Arun	Arun	Arun	Arun
14	15ESKME031	AVINASH KUMAR	Avinash	Avinash	Avinash	Avinash	Avinash	Avinash	Avinash	AB
15	15ESKME034	BALDEV SHARMA	Baldev	Baldev	Baldev	AB	AB	AB	AB	AB
16	15ESKME035	BHANU PRATAP SINGH	Bhanu	Bhanu	Bhanu	Bhanu	Bhanu	Bhanu	AB	Bhanu
17	15ESKME037	CHINMAY CHOURDIA	Chhaurdia	Chhaurdia	Chhaurdia	Chhaurdia	Chhaurdia	Chhaurdia	Chhaurdia	Chhaurdia
18	15ESKME041	DEEPAK NOGIA	Deepak	Deepak	Deepak	Deepak	Deepak	Deepak	AB	Deepak
19	15ESKME042	DEV VRAT GOSWAMI	AB	Devvrat	Devvrat	Devvrat	Devvrat	Devvrat	AB	Devvrat
20	15ESKME043	DEVANSH DIXIT	Devansh	Devansh	Devansh	Devansh	Devansh	Devansh	AB	AB
21	15ESKME044	DEVENDRA KUMAR	Dev	Dev	Dev	Dev	Dev	Dev	Dev	Dev
22	15ESKME046	DHIRAJ KUMAR MISHRA	AB	Dhiraj	Dhiraj	Dhiraj	Dhiraj	Dhiraj	Dhiraj	Dhiraj
23	15ESKME047	DIKSHANT KHEMANI	Dikshant	Dikshant	Dikshant	Dikshant	Dikshant	Dikshant	AB	Dikshant
24	15ESKME051	DIVYA JAIN	Divya	Divya	Divya	Divya	Divya	Divya	AB	AB
25	15ESKME052	DUSHYANT KARADIA	Dushyant	Dushyant	Dushyant	Dushyant	Dushyant	Dushyant	AB	Dushyant
26	15ESKME054	GANESH PATEL	Ganesh	Ganesh	Ganesh	Ganesh	Ganesh	Ganesh	AB	AB
27	15ESKME055	GAURAV DADHICH	Gaurav	Gaurav	Gaurav	Gaurav	Gaurav	Gaurav	AB	Gaurav
28	15ESKME056	GAURAV MAHESHWARI	Gaurav	Gaurav	Gaurav	Gaurav	Gaurav	Gaurav	Gaurav	Gaurav
29	15ESKME058	GAURAV SHARMA	Gaurav	Gaurav	Gaurav	Gaurav	Gaurav	Gaurav	AB	Gaurav
30	15ESKME059	GOPAL LAL KURI	गोपाल	गोपाल	गोपाल	गोपाल	गोपाल	गोपाल	AB	AB
31	15ESKME061	GOURAV SAINI	Gaurav	Gaurav	Gaurav	Gaurav	Gaurav	AB	AB	Gaurav
32	15ESKME063	Bhuvnesh Chand	AB	BC	BC	BC	BC	BC	AB	Bhuvnesh
33	15ESKME065	Adarsh goyal	AB	Adarsh	Adarsh	Adarsh	Adarsh	Adarsh	AB	Adarsh
34	15ESKME045	devesh m.	Dev	Dev	Dev	Dev	Dev	Dev	AB	AB
35	15ESKME015	Amar Bakoliya	AB	Amar	Amar	Amar	Amar	Amar	AB	AB
36	15ESKME019	AKANSH KOTHARI	AB	Akansh	Akansh	Akansh	Akansh	Akansh	AB	AB
37	15ESKME066	Gopal sharma	AB	Gopal	Gopal	Gopal	Gopal	Gopal	Gopal	Gopal
38	15ESKME062	Govind Ram	AB	Govind	Govind	Govind	Govind	Govind	Govind	Govind
39	15ESKME049	DINKAL	AB	AB	AB	AB	AB	AB	AB	AB
	GATE REGISTERED STUDENTS (SEC-B)		06/3/17	07/3/17	8/3/17	9/3/17	10/3/17	11/3/17		
1	15ESKME066	HARSHIT TIWARI	AB	Harshit Tiwari	Harshit Tiwari	Harshit Tiwari	Harshit Tiwari	Harshit Tiwari	AB	AB
2	15ESKME067	HIMANSHU JAIN	AB	Himanshu	Himanshu	Himanshu	Himanshu	Himanshu	AB	AB
3	15ESKME069	HITANSHU BHARDWAJ	AB	Hitanshu	Hitanshu	Hitanshu	Hitanshu	Hitanshu	AB	AB
4	15ESKME071	HRITVIK SHARMA	AB	Hritvik	AB	AB	[illegible]	Hritvik	AB	
5	15ESKME073	INDRAJEET SINGH JADON	Indrajeet	Indrajeet	Indrajeet	Indrajeet	Indrajeet	Indrajeet	Indrajeet	Indrajeet
6	15ESKME075	JAI PRAKASH SAINI	AB	Jai	AB	AB	AB	AB	AB	AB
7	15ESKME076	JAIN SAPAN	AB	AB	[illegible]	[illegible]	[illegible]	[illegible]	AB	[illegible]
8	15ESKME077	JAINAM JAIN	AB	AB	Jainam	AB	AB	AB	AB	AB
9	15ESKME078	JASWANT SINGH RAWAT	AB	Jaswant	Jaswant	Jaswant	Jaswant	Jaswant	AB	AB
10	15ESKME081	JITENDER KUMAR YADAV	Jitender	Jitender	Jitender	Jitender	Jitender	Jitender	AB	Jitender
11	15ESKME082	KARAN SINGH TANWAR	AB	AB	AB	AB	AB	AB	AB	AB
12	15ESKME083	KARANVEER SINGH RATHORE	AB	AB	Karan	Karan	Karan	AB	AB	AB
13	15ESKME088	KUNAL RAO INGALE	कुणाल राव	कुणाल राव	कुणाल राव	कुणाल राव	कुणाल राव	कुणाल राव	AB	AB
14	15ESKME090	LALIT KUMAR	Lalit	Lalit	Lalit	Lalit	Lalit	Lalit	AB	AB
15	15ESKME092	MANISH KUMAR KUMAWAT	manish	manish	manish	manish	manish	manish	AB	manish
16	15ESKME094	MANISH KUMAWAT	Manish	Manish	Manish	Manish	Manish	Manish	AB	Manish
17	15ESKME096	MANOJ KUMAR BAIRWA	AB	AB	[illegible]	AB	AB	AB	AB	AB

RECORD OF ATTENDANCE OF GATE SESSIONS (IV Sem-Session Jan-June 2017)

S.No.	ROLL NO	NAME OF STUDENT	06/3/17	7/3/17	08/03/17	09-03-17	10-3-17	11-3-17	14/3/17	15/3/17
18	15ESKME097	MANU SAXENA	AB	AB	AB	AB	AB	AB	AB	AB
19	15ESKME098	MAYANK AGGARWAL	AB	Mayank	Mayank	Mayank	Mayank	AB	AB	AB
20	15ESKME099	MAYANK JAIN	AB	Mayank	Mayank	Mayank	AB	AB	AB	Mayank Jain
21	15ESKME101	MAYURESH JAIN	AB	[illegible]	AB	AB	AB	AB	AB	AB
22	15ESKME103	MD IMRAN	Md. Imran	Md. Imran	Md. Imran	Md. Imran	Md. Imran	Md. Imran	AB	Md. Imran
23	15ESKME109	MRINAL MATHUR	AB	Mrinal	Mrinal	Mrinal	Mrinal	Mrinal	AB	Mrinal
24	15ESKME112	NARENDRA BHANDARI	AB	Narendra	Narendra	Narendra	Narendra	Narendra	AB	Narendra
25	15ESKME113	NARENDRA SINGH	AB	AB	AB	AB	AB	AB	AB	AB
26	15ESKME114	NAVDEEP SINGH NATHAWAT	AB	AB	AB	AB	AB	AB	AB	AB
27	15ESKME115	NIKHIL KUMAR JAIN	AB	[illegible]	[illegible]	[illegible]	[illegible]	AB	AB	[illegible]
28	15ESKME116	NITESH KUMAR GURJAR	AB	AB	[illegible]	AB	AB	AB	AB	AB
29	15ESKME118	NITIN MISHRA	AB	AB	AB	AB	AB	AB	AB	AB
30	15ESKME121	PANKAJ SAIN	AB	[illegible]	[illegible]	AB	[illegible]	[illegible]	AB	[illegible]
31	15ESKME125	PIYUSH AGARWAL	AB	[illegible]	[illegible]	AB	AB	AB	AB	AB
32	15ESKME126	PIYUSH GARG	AB	Piyush	AB	AB	AB	AB	AB	AB
33	15ESKME065	Harshit Soni	AB	हर्षित सोनी	हर्षित सोनी	हर्षित सोनी	हर्षित सोनी	हर्षित सोनी	AB	हर्षित सोनी
34	15ESKME095	MANOJ DHANDA	manoj	manoj	manoj	manoj	manoj	manoj	AB	manoj
35	15ESKME089	LAKSHYA YADAV	AB	Lakshya	Lakshya	Lakshya	Lakshya	Lakshya	AB	Lakshya
36	15ESKME084	KESHAV MOT	AB	AB	AB	AB	AB	AB	AB	[illegible]

	GATE REGISTERED STUDENTS (SEC-C)		06/3/17	07/3/17	8/3/17	9/3/17	10/3/17	11/3/17	14/3/17	15/3/017
1	15ESKME127	PRAGYA KHANDAL	Khandal	Khandal	Khandal	AB	Khandal	Khandal	Khandal	Khandal
2	15ESKME129	PRAMESHWAR LAL PRAJAPAT	[illegible]	[illegible]	[illegible]	[illegible]	[illegible]	[illegible]	AB	[illegible]
3	15ESKME137	RAHUL SAINI (G.R.M.)	[illegible]	[illegible]	[illegible]	[illegible]	Rahul	AB	[illegible]	[illegible]
4	15ESKME138	RAHUL SAINI (V.K.S.)	Rsaini	Rsaini	Rsaini	Rsaini	Rsaini	Rsaini	[illegible]	Rsaini
5	15ESKME139	RAHUL VERMA	Rahul	Rahul	Rahul	Rahul	Rahul	Rahul	AB	[illegible]
6	15ESKME142	RAJESH KUMAR	Rajesh	Rajesh	Rajesh	Rajesh	Rajesh	Rajesh	Rajesh	Rajesh
7	15ESKME144	RAVI RANJAN KUMAR	Ravi	Ravi	Ravi	Ravi	Ravi	Ravi	Ravi	Ravi
8	15ESKME145	RISHABH SAIN	[illegible]	[illegible]	[illegible]	[illegible]	[illegible]	[illegible]	[illegible]	[illegible]
9	15ESKME148	ROHIT MALVIYA	AB	[illegible]	[illegible]	AB	[illegible]	[illegible]	[illegible]	[illegible]
10	15ESKME149	ROUNAK DHATTERWAL	Rounak	Rounak	[illegible]	Rounak	Rounak	AB	Rounak	Rounak
11	15ESKME150	ROUNAK NUWAL	Rounak	Rounak	[illegible]	Rounak	Rounak	AB	AB	Rounak
12	15ESKME154	SANDEEP SINGH	Sandeep	Sandeep	Sandeep	Sandeep	Sandeep	AB	[illegible]	Sandeep
13	15ESKME157	SAVEJ	Mohd Shahwaz	Mohd Shahwaz	Mohd Shahwaz	Mohd Shahwaz	Mohd Shahwaz	Mohd Shahwaz	Mohd Shahwaz	Mohd Shahwaz
14	15ESKME158	SHAILENDRA SARASWAT	Shailendra	Shailendra	Shailendra	Shailendra	Shailendra	Shailendra	Shailendra	Shailendra
15	15ESKME159	SHAILENDRA SINGH BHATI	[illegible]	[illegible]	[illegible]	[illegible]	[illegible]	[illegible]	[illegible]	[illegible]
16	15ESKME161	SHIWANI	Shiwani	Shiwani	Shiwani	Shiwani	Shiwani	Shiwani	Shiwani	Shiwani
17	15ESKME162	SHREYANSH GOSWAMI	AB	Shreyansh	Shreyansh	Shreyansh	Shreyansh	Shreyansh	AB	Shreyansh
18	15ESKME166	SHUBHAM SAINI	[illegible]	[illegible]	[illegible]	[illegible]	[illegible]	AB	AB	AB
19	15ESKME174	SUNIL VERMA	AB	Sunil	Sunil	Sunil	Sunil	AB	Sunil	Sunil
20	15ESKME175	SURESH KUMAR NAGARWAL	AB	Suresh	Suresh	Suresh	Suresh	Suresh	Suresh	Suresh
21	15ESKME177	TARUN JAIN	Tarun Jain	Tarun Jain	Tarun Jain	Tarun Jain	Tarun Jain	AB	AB	Tarun Jain
22	15ESKME178	UTKARSH SHAHU	Utkarsh	Utkarsh	Utkarsh	Utkarsh	Utkarsh	Utkarsh	Utkarsh	Utkarsh
23	15ESKME180	VIKAS GAUR	Vikas	Vikas	Vikas	Vikas	Vikas	Vikas	AB	Vikas
24	15ESKME182	VISHAL KUMAR SONI	Vishal Kumar Soni	Vishal Kumar Soni	Vishal Kumar Soni	Vishal Kumar Soni	Vishal Kumar Soni	Vishal Kumar Soni	AB	Vishal Soni
25	15ESKME183	VISHNU CHEJARA	Vishnu	Vishnu	Vishnu	Vishnu	Vishnu	AB	AB	Vishnu
26	15ESKME184	VIVEK JANGID	Vivek Jangid	Vivek Jangid	AB P	Vivek Jangid	Vivek Jangid	Vivek Jangid	AB	AB
27	15ESKME186	YOGESH MAHAWAR	AB	Yogesh	Yogesh	Yogesh	Yogesh	Yogesh	Yogesh	Yogesh
28	15ESKME187	YOGESH PRAJAPAT	AB	AB	Yogesh	Yogesh	Yogesh	Yogesh	AB	Yogesh
29	15ESKME188	YUGANSHU SHARMA	[illegible]	[illegible]	[illegible]	[illegible]	[illegible]	[illegible]	[illegible]	[illegible]
30	15ESKME300	VISHAL SHARMA	AB	AB	Vishal	Vishal	Vishal	AB	AB	Vishal
31	16ESKME202	MANISH KUMAWAT (D)	मनीष कुमावत	मनीष कुमावत	मनीष कुमावत	मनीष कुमावत	मनीष कुमावत	मनीष कुमावत	मनीष कुमावत	मनीष कुमावत
32	16ESKME204	PIYUSH JANGID (D)	AB	Piyush	Piyush	AB	Piyush	AB	AB	Piyush
33	16ESKME208	SUNIL KUMAWAT (D)	सुनील कुमावत	सुनील कुमावत	सुनील कुमावत	सुनील कुमावत	सुनील कुमावत	सुनील कुमावत	सुनील कुमावत	सुनील कुमावत
34	15ESKME165	SHURHAM PRADHAN	Shubham	Shubham	Shubham	Shubham	Shubham	Shubham	Shubham	Shubham
35	15ESKME199	VANSHDEEP SINGH	AB	AB	V.D. Singh	V.D. Singh	V.D. Singh	V.D. Singh	V.D. Singh	V.D. Singh
36	15ESKME203	Neda ur Rehman	AB	AB	AB	AB	AB	AB	AB	Rehman
37	16ESKME300	APOORV SINHA	AB	AB	AB	AB	AB	AB	AB	Apoorv Sinha

RECORD OF ATTENDANCE OF GATE SESSIONS (IV Sem-Session Jan-June 2017)

S.No.	ROLL NO	NAME OF STUDENT								
		GATE REGISTERED STUDENTS (SEC-S)	06/3/17	7/3/17	8/3/17	9/3/17	10/3/17	11/3/17	12/4/3/17	15/3/17
1	15ESKME351	MIHIR VIJAYVARGIYA	Mihir	Mihir	Mihir	Mihir	Mihir	Mihir	Mihir	Mihir
2	15ESKME707	AKHILESH KUMAR	Akhilesh	Akhilesh	Akhilesh	Akhilesh	Akhilesh	Akhilesh	Akhilesh	Akhilesh
3	15ESKME712	ASHOK KUMAR MALI	AB	AB	AB	AB	AB	AB	AB	AB
4	15ESKME714	ASHUTOSH SHUKLA						AB	AB	AB
5	15ESKME715	BHAV MATHUR	bhm	bhm	bhm	bhm	bhm	bhm	AB	AB
6	15ESKME726	KAMLESH KUMAR	Kamlesh	Kamlesh	Kamlesh	Kamlesh	Kamlesh	Kamlesh	Kamlesh	Kamlesh
7	15ESKME732	MD FAHAD IQUBAL	Fahad Iqubal	Fahad Iqubal	Fahad Iqubal	Fahad Iqubal	Fahad Iqubal	Fahad Iqubal	AB	Fahad Iqubal
8	15ESKME734	MOHAN RAM JAT							Fahad Iqubal	Fahad Iqubal
9	15ESKME735	MRITYUNJAY CHOUBEY	AB							
10	15ESKME738	NEMISH BHATT	AB	Nemish	Nemish	Nemish	Nemish	Nemish	AB	AB
11	15ESKME745	RAHUL YADAV	AB	Rahul	Rahul	Rahul	Rahul	Rahul	AB	Rahul
12	15ESKME748	RASHID ANWAR	Rashid Anwar	Rashid Anwar	Rashid	Rashid	Rashid	Rashid	Rashid	Rashid
13	15ESKME749	RAVI CHOUDHARY	AB	Ravi	Ravi	Ravi	Ravi	Ravi	AB	Ravi
14	15ESKME750	RISHABH SHARMA	AB						AB	
15	15ESKME751	SAGAR KUMAR	Sagar Kumar	Sagar Kumar	Sagar Kumar	Sagar Kumar	Sagar Kumar	Sagar Kumar	AB	Sagar Kumar
16	15ESKME752	SAMPAT SINGH RAWAT	AB	Sampat Singh	Sampat Singh	Sampat Singh	Sampat Singh	Sampat Singh	AB	AB
17	15ESKME762	YASH VERMA	AB	AB	Yash Verma	Yash Verma	Yash Verma	Yash Verma	AB	AB
		Signature of Resource Person								
		TOTAL DAILY ATTENDANCE	78	108	115	106	112	89	47	87

Coordinators(GATE Classes_2016-17):
Dheeraj Joshi
Rajendra Singh Chundawat

STATISTICS:

1) Total formally registered students : 31 + 32 + 33 + 17 = 113

2.) No. of students registered (on class commencement) (informally) = 8 + 4 + 4 = 16

SHEET-II (2)

DEPARTMENT OF MECHANICAL ENGINEERING

RECORD OF ATTENDANCE OF GATE SESSIONS (IV Sem-Session Jan-June 2017)

S.No.	ROLL NO	NAME OF STUDENT	16/03	17/03	18/03	20/03	21/03	22/03	23/03
		GATE REGISTERED STUDENTS (SEC-A)							
1	14ESKME024	AYUSH TAK ®						A	A
2	15ESKME003	ABHISHEK PALIWAL						A	
3	15ESKME004	ABHISHEK TINKER						A	
4	15ESKME006	ADARSH PANSARI						P	
5	15ESKME008	AJAY KUMAR BAIRWA						P	
6	15ESKME009	AJAY TAWANIA						P	
7	15ESKME018	ANAY MATHUR						A	
8	15ESKME020	ANKIT SAIN						A	
9	15ESKME021	ANKUR SHARMA						A	
10	15ESKME022	ANOP MUNDEL						P	
11	15ESKME023	ARENDRA SINGH						P	
12	15ESKME024	ARJUN PATIDAR						P	
13	15ESKME025	ARUN MAHAWAR						P	
14	15ESKME031	AVINASH KUMAR						A	
15	15ESKME034	BALDEV SHARMA						P	
16	15ESKME035	BHANU PRATAP SINGH						P	
17	15ESKME037	CHINMAY CHOURDIA						P	
18	15ESKME041	DEEPAK NOGIA						P	
19	15ESKME042	DEV VRAT GOSWAMI						P	
20	15ESKME043	DEVANSH DIXIT						P	
21	15ESKME044	DEVENDRA KUMAR						P	
22	15ESKME046	DHIRAJ KUMAR MISHRA						A	
23	15ESKME047	DIKSHANT KHEMANI						A	
24	15ESKME051	DIVYA JAIN						P	
25	15ESKME052	DUSHYANT KARADIA						P	
26	15ESKME054	GANESH PATEL						P	
27	15ESKME055	GAURAV DADHICH						P	
28	15ESKME056	GAURAV MAHESHWARI						P	
29	15ESKME058	GAURAV SHARMA						P	
30	15ESKME059	GOPAL LAL KURI						P	
31	15ESKME061	GOURAV SAINI						P	
32	15ESKME036	BHUVNESH CHAND						P	
33	15ESKME005	ADARSH GOYAL						P	
34	15ESKME045	DEVESH M						P	
35	15ESKME015	AMAN BAKOLIYA						P	
36	15ESKME010	AKANSH KOTHARI						A	
37	15ESKME060	GOPAL SHARMA						P	
38	15ESKME062	GOVIND RAM						P	
39	15ESKME043	DINKAL						A	
40	11 — 53	FARHAN						A	
41	45								

			16/03	17/03	18/03	20/03	21/03	22/03	23/03
		GATE REGISTERED STUDENTS (SEC-B)							
1	15ESKME066	HARSHIT TIWARI							
2	15ESKME067	HIMANSHU JAIN							
3	15ESKME069	HITANSHU BHARDWAJ							
4	15ESKME071	HRITVIK SHARMA			A	A	A		
5	15ESKME073	INDRAJEET SINGH JADON							
6	15ESKME075	JAI PRAKASH SAINI	A		A	A	A	A	A
7	15ESKME076	JAIN SAPAN							
8	15ESKME077	JAINAM JAIN			A	A	A	A	A
9	15ESKME078	JASWANT SINGH RAWAT							
10	15ESKME081	JITENDER KUMAR YADAV			A				
11	15ESKME082	KARAN SINGH TANWAR	A		A	A	A	A	A
12	15ESKME083	KARANVEER SINGH RATHORE	A			A			
13	15ESKME088	KUNAL RAO INGALE							
14	15ESKME090	LALIT KUMAR							
15	15ESKME092	MANISH KUMAR KUMAWAT							
16	15ESKME094	MANISH KUMAWAT							
17	15ESKME096	MANOJ KUMAR BAIRWA	A		A	A	A	A	A

RECORD OF ATTENDANCE OF GATE SESSIONS (IV Sem-Session Jan-June 2017)

S.No.	ROLL NO	NAME OF STUDENT	16/03	17/03	18/03	20/03	21/03	22/03	23/03
18	15ESKME097	MANU SAXENA	A		A	A	A	A	A
19	15ESKME098	MAYANK AGGARWAL	Mayk		Mayk	Mayk	Mayk	Mayk	Mayk
20	15ESKME099	MAYANK JAIN	Mayk		A	Mayk	Mayk	Mayk	Mayk
21	15ESKME101	MAYURESH JAIN	A		A	A	A	Mayk	Mayk
22	15ESKME103	MD IMRAN	Md. Imran		Md. Imran	Md. Imran	Md. Imran	A	Md. Imran
23	15ESKME109	MRINAL MATHUR	A		A	Mrinal	Mrinal	Mrinal	Mrinal
24	15ESKME112	NARENDRA BHANDARI	Narendra		A	Narendra	Narendra	Narendra	Narendra
25	15ESKME113	NARENDRA SINGH	A		A	A	A	A	A
26	15ESKME114	NAVDEEP SINGH NATHAWAT	A		A	A	A	A	A
27	15ESKME115	NIKHIL KUMAR JAIN	A		A	A	A	A	A
28	15ESKME116	NITESH KUMAR GURJAR	A		A	A	A	(Nitesh)	A
29	15ESKME118	NITIN MISHRA	A		A	A	A	A	A
30	15ESKME121	PANKAJ SAIN	A		A	A	A	A	A
31	15ESKME125	PIYUSH AGARWAL	A		A	A	A	A	A
32	15ESKME126	PIYUSH GARG	A		A	A	A	A	A
33	15ESKME065	HARSHIT SONI	हर्षित सोनी	हर्षित सोनी	हर्षित सोनी	हर्षित सोनी	हर्षित सोनी	A	हर्षित सोनी
34	15ESKME095	MANOJ DEVANDA	manoj		A	A	manoj	manoj	manoj
35	15ESKME089	LAKSHYA YADAV	Lakshya		Lakshya	Lakshya	Lakshya	Lakshya	A
36	15ESKME084	KESHAV MOT	Kesh		A	Kesh	Kesh	Kesh	Kesh
37	15ESKME079	Jayant Jain	Jayant Jain		Jayant Jain	Jayant Jain	Jayant	A	Jayant
38	15ESKME072	Indrabhushan Sharma	Ishan		Ishan	Ishan	Ishan	Ishan	A
39	15ESK								
39	15ESKME105	Mohan Lal Devand	Mohan		Mohan	A	Mohan	Mohan	Mohan
40	15ESKME098	Mahesh Suwalka	Mahesh						Mahesh
	GATE REGISTERED STUDENTS (SEC-C)		16/03	17/03	18/03	20/03	21/03	22/03	23/03
1	15ESKME127	PRAGYA KHANDAL	Khandal		A	Khandal	Khandal	Khandal	Khandal
2	15ESKME129	PRAMESHWAR LAL PRAJAPAT	A		A	A	A	[illegible]	[illegible]
3	15ESKME137	RAHUL SAINI (G.R.M.)	Rahul		A	Rahul	Rahul	Rahul	Rahul
4	15ESKME138	RAHUL SAINI (V.K.S.)	R Saini		A	R Saini	R Saini	R Sain	R Saini
5	15ESKME139	RAHUL VERMA	Rahul		Rahul	Rahul	Rahul	Rahul	Rahul
6	15ESKME142	RAJESH KUMAR	Rajesh		A	Rajesh	Rajesh	Rajesh	Rajesh
7	15ESKME144	RAVI RANJAN KUMAR	Ravi		Ravi	Ravi	Ravi	Ravi	Ravi
8	15ESKME145	RISHABH SAIN	Rishabh		A	Rishabh	Rishabh	Rishabh	Rishabh
9	15ESKME148	ROHIT MALVIYA	Rohit		A	Rohit	Rohit	A	Rohit
10	15ESKME149	ROUNAK DHATTERWAL	Rounak		Rounak	Rounak	Rounak	Rounak	Rounak
11	15ESKME150	ROUNAK NUWAL	Rounak		Rounak	Rounak	Rounak	Rounak	Rounak
12	15ESKME154	SANDEEP SINGH	Sandeep		A	Sandeep	Sandeep	Sandeep	Sandeep
13	15ESKME157	SAVEJ	Mohit Sharma			Mohit Sharma	Mohit Sharma	Mohit Sharma	Mohit Sharma
14	15ESKME158	SHAILENDRA SARASWAT	Shailendra		A	Shailendra	Shailendra	Shailendra	Shailendra
15	15ESKME159	SHAILENDRA SINGH BHATI	[redacted]		[redacted]	[redacted]	[redacted]	[redacted]	[redacted]
16	15ESKME161	SHIWANI	[redacted]		[redacted]	[redacted]	[redacted]	[redacted]	[redacted]
17	15ESKME162	SURYANSH GOSWAMI	[redacted]		[redacted]	[redacted]	[redacted]	[redacted]	[redacted]
18	15ESKME166	SHUBHAM SAINI	[redacted]		[redacted]	[redacted]	[redacted]	[redacted]	[redacted]
19	15ESKME174	SUNIL VERMA	[redacted]		[redacted]	[redacted]	[redacted]	[redacted]	[redacted]
20	15ESKME175	SURESH KUMAR NAGARWAL	Suresh		[redacted]	[redacted]	[redacted]	[redacted]	[redacted]
21	15ESKME177	TARUN JAIN	Tarun Jain		[redacted]	[redacted]	[redacted]	[redacted]	Tarun Jain
22	15ESKME178	UTKARSH SHAHU	Utkarsh		A	Utkarsh	Utkarsh	Utkarsh	Utkarsh
23	15ESKME180	VIKAS GAUR	Vikas		A	Vikas	Vikas	Vikas	Vikas
24	15ESKME182	VISHAL KUMAR SONI	Vishal Soni		Vishal Soni	Vishal Soni	Vishal Soni	Vishal Soni	Vishal Soni
25	15ESKME183	VISHNU CHEJARA	Vishnu		Vishnu	Vishnu	Vishnu	A	Vishnu
26	15ESKME184	VIVEK JANGID	Vivek Jangid		Vivek Jangid	Vivek Jangid	Vivek Jangid	Vivek Jangid	Vivek Jangid
27	15ESKME186	YOGESH MAHAWAR	Yogesh		Yogesh	Yogesh	Yogesh	A	Yogesh
28	15ESKME187	YOGESH PRAJAPAT	Yogesh		Yogesh	Yogesh	Yogesh	Yogesh	Yogesh
29	15ESKME188	YUGANSHU SHARMA	[illegible]		[illegible]	[illegible]	[illegible]	[illegible]	[illegible]
30	15ESKME300	VISHAL SHARMA	Vishal		A	Vishal	Vishal	Vishal	Vishal
31	16ESKME202	MANISH KUMAWAT (D)	मनीष कुमावत		मनीष कुमावत	मनीष कुमावत	मनीष कुमावत	A	मनीष कुमावत
32	16ESKME204	PIYUSH JANGID (D)	Piyush		Piyush	Piyush	Piyush	Piyush	Piyush
33	16ESKME208	SUNIL KUMAWAT (D)	सुनील कुमावत		सुनील कुमावत	सुनील कुमावत	सुनील कुमावत	सुनील कुमावत	सुनील कुमावत
33	16ESKME165	SHUBHAM PRADHAN	Shubham		Shubham	Shubham	Shubham	Shubham	Shubham
33	16ESKME179	VANSHDEEP SINGH	V.D Singh		V.D Singh	V.D Singh	V.D Singh	V.D Singh	V.D Singh
33	16ESKME203	NEDA UR REHMAN	Rehman		A	Rehman	A	Rehman	Rehman
33	16ESKME200	APOORV SINHA	Apoorv Sinha		A	Apoorv Sinha	Apoorv Sinha	Apoorv Sinha	Apoorv Sinha
34	16ESKME205	PIYUSH KUMAR (D)	Piyush		A	Piyush	Piyush	Piyush	Piyush
35	15ESKME155	Satyam Kumar	[illegible]		A	A	A	A	A
36	15ESKME136	Rahul Kumar	A		A	A	A	A	Rahul
37	15ESKME111	Rajeev Sain Marathonga	A		A	A	A	Raje	Raje

RECORD OF ATTENDANCE OF GATE SESSIONS (IV Sem-Session Jan-June 2017)

S.No.	ROLL NO	NAME OF STUDENT	16/03	17/03	18/03	20/03	21/03	22/03	23/03
	GATE REGISTERED STUDENTS (SEC-S)		16/03	17/03	18/03	20/03	21/03	22/03	23/03
1	15ESKME351	MIHIR VIJAYVARGIYA	Mihir		Mihir	Mihir	Mihir	Mihir	Mihir
2	15ESKME707	AKHILESH KUMAR	Akhilesh		A	Akhilesh	Akhilesh	A	Akhilesh
3	15ESKME712	ASHOK KUMAR MALI	A		A	A	A	A	A
4	15ESKME714	ASHUTOSH SHUKLA	A		A	A	A	A	A
5	15ESKME715	BHAV MATHUR	bhav		A	bhav	bhav	bhav	bhav
6	15ESKME726	KAMLESH KUMAR	Kamlesh		A	Kamlesh	Kamlesh	Kamlesh	Kamlesh
7	15ESKME732	MD FAHAD IQUBAL	Fahad Iqbal		A	Fahad Iqbal	Fahad Iqbal	Fahad Iqbal	Fahad Iqbal
8	15ESKME734	MOHAN RAM JAT	[illegible]	[illegible]	[illegible]	[illegible]	[illegible]	[illegible]	[illegible]
9	15ESKME735	MRITYUNJAY CHOUBEY	[illegible]	[illegible]	[illegible]	[illegible]	[illegible]	[illegible]	[illegible]
10	15ESKME738	NEMISH BHATT	Nemish		A	Nemish	Nemish	Nemish	Nemish
11	15ESKME745	RAHUL YADAV	Rahul		A	Rahul	Rahul	A	Rahul
12	15ESKME748	RASHID ANWAR	Rashid	Rashid	A	Rashid	Rashid	Rashid	Rashid
13	15ESKME749	RAVI CHOUDHARY	Ravi		A	Ravi	Ravi	Ravi	Ravi
14	15ESKME750	RISHABH SHARMA	Rishabh	Rishabh	Rishabh	Rishabh	Rishabh	Rishabh	Rishabh
15	15ESKME751	SAGAR KUMAR	Sagar Kumar	Sagar Kumar	Sagar Kumar	Sagar Kumar	Sagar Kumar	Sagar Kumar	Sagar Kumar
16	15ESKME752	SAMPAT SINGH RAWAT	Sampat Singh	Sampat Singh	A	Sampat Singh	Sampat Singh	Sampat Singh	Sampat Singh
17	15ESKME762	YASH VERMA	A		Yash	Yash	Yash	A	Yash
18	15ESKME717	Chirag Parik	[illegible]		A	[illegible]	[illegible]	[illegible]	[illegible]
19	15ESKME713	Ashutosh Sharma	A		A	A	A	A	A
20	15ESKME727	Kapil Jetawat	A		A	[illegible]	A	A	A
21	15ESKME700	Aashish Kumar	A		A	A	A	A	A
II Sem	16ESKME755	Vaibhav Bixla (II Sem)	[illegible]						
	[redacted]								
	[redacted]								

[redacted]

Coordinators(GATE Classes_2016-17):
[redacted] Joshi
Rajendra Singh Chundawat

* No. of students who registered informally from 16/3/17 : 01 + 04 + 04 + 04 = 13 students

SHEET: (III)

DEPARTMENT OF MECHANICAL ENGINEERING

RECORD OF ATTENDANCE OF GATE SESSIONS (IV Sem-Session Jan-June 2017)

S.No.	ROLL NO	NAME OF STUDENT	24/03	25/03	27/03	28/03	29/03	30/03	31/03	01/04/2017
		GATE REGISTERED STUDENTS (SEC-A)								
1	14ESKME024	AYUSH TAK ®	Ayush Tak	AB	Ayush Tak	Ayush Tak	Ayush Tak	Ayush Tak	Ayush Tak	Ayush Tak
2	15ESKME003	ABHISHEK PALIWAL	Abhishek	Abhishek	Abhishek	Abhishek	Abhishek	Abhishek	Abhishek	Abhishek
3	15ESKME004	ABHISHEK TINKER	Abhishek	Abhishek	Abhishek	Abhishek	Abhishek	Abhishek	Abhishek	Abhishek
4	15ESKME006	ADARSH PANSARI	Adarsh	Adarsh	Adarsh	Adarsh	Adarsh	Adarsh	Adarsh	Adarsh
5	15ESKME008	AJAY KUMAR BAIRWA	Ajay	Ajay	Ajay	Ajay	Ajay	Ajay	Ajay	Ajay
6	15ESKME009	AJAY TAWANIA	Ajay	Ajay	Ajay	Ajay	Ajay	Ajay	Ajay	Ajay
7	15ESKME018	ANAY MATHUR	AB	AB	Anay	Anay	Anay	Anay	Anay	Anay
8	15ESKME020	ANKIT SAIN	Ankit	Ankit	Ankit	Ankit	Ankit	Ankit	Ankit	Ankit
9	15ESKME021	ANKUR SHARMA	AB	AB	Ankur	Ankur	Ankur	Ankur	Ankur	Ankur
10	15ESKME022	ANOP MUNDEL	Anop	Anop	Anop	Anop	Anop	Anop	Anop	Anop
11	15ESKME023	ARENDRA SINGH	Arendra	Arendra	Arendra	Arendra	Arendra	Arendra	Arendra	Arendra
12	15ESKME024	ARJUN PATIDAR	Arjun	Arjun	Arjun	Arjun	Arjun	Arjun	Arjun	Arjun
13	15ESKME025	ARUN MAHAWAR	Arun	Arun	Arun	Arun	Arun	Arun	Arun	Arun
14	15ESKME031	AVINASH KUMAR	Avinash	Avinash	Avinash	Avinash	AB	Avinash	Avinash	Avinash
15	15ESKME034	BALDEV SHARMA	AB	AB	AB	Baldev	AB	AB	AB	
16	15ESKME035	BHANU PRATAP SINGH	Bhanu	Bhanu	Bhanu	Bhanu	Bhanu	Bhanu	Bhanu	Bhanu
17	15ESKME037	CHINMAY CHOURDIA	Chinmay	Chinmay	Chinmay	Chinmay	Chinmay	Chinmay	Chinmay	Chinmay
18	15ESKME041	DEEPAK NOGIA	Deepak	Deepak	Deepak	Deepak	Deepak	Deepak	Deepak	Deepak
19	15ESKME042	DEV VRAT GOSWAMI	Devvrat	Devvrat	Devvrat	Devvrat	Devvrat	Devvrat	Devvrat	Devvrat
20	15ESKME043	DEVANSH DIXIT	Devansh	Devansh	Devansh	Devansh	Devansh	Devansh	Devansh	Devansh
21	15ESKME044	DEVENDRA KUMAR	Dev	Dev	Dev	Dev	Dev	Dev	Dev	Dev
22	15ESKME046	DHIRAJ KUMAR MISHRA	Dhiraj	Dhiraj	Dhiraj	Dhiraj	Dhiraj	Dhiraj	Dhiraj	Dhiraj
23	15ESKME047	DIKSHANT KHEMANI	Dikshant	Dikshant	Dikshant	Dikshant	Dikshant	Dikshant	Dikshant	Dikshant
24	15ESKME051	DIVYA JAIN	Divya	Divya	Divya	Divya	Divya	Divya	Divya	Divya
25	15ESKME052	DUSHYANT KARADIA	Dushyant	Dushyant	Dushyant	Dushyant	Dushyant	Dushyant	Dushyant	Dushyant
26	15ESKME054	GANESH PATEL	Ganesh	Ganesh	Ganesh	Ganesh	Ganesh	Ganesh	Ganesh	Ganesh
27	15ESKME055	GAURAV DADHICH	Gaurav	Gaurav	Gaurav	Gaurav	Gaurav	Gaurav	Gaurav	Gaurav
28	15ESKME056	GAURAV MAHESHWARI	Gaurav	Gaurav	Gaurav	Gaurav	Gaurav	Gaurav	Gaurav	Gaurav
29	15ESKME058	GAURAV SHARMA	Gaurav	Gaurav	Gaurav	Gaurav	Gaurav	Gaurav	Gaurav	Gaurav
30	15ESKME059	GOPAL LAL KURI	गोपाल	गोपाल	गोपाल	गोपाल	गोपाल	गोपाल	गोपाल	गोपाल
31	15ESKME061	GOURAV SAINI	Gaurav	Gaurav	Gaurav	Gaurav	Gaurav	Gaurav	Gaurav	Gaurav
32	15ESKME036	BHUVNESH CHAND	Bh	Bh	AB	Bh	Bh	Bh	Bh	Bh
33	15ESKME005	ADARSH GOYAL	Adarsh	Adarsh	Adarsh	Adarsh	Adarsh	Adarsh	Adarsh	Adarsh
34	15ESKME045	DEVESH M	Dt	Dt	Dt	Dt	Dt	Dt	Dt	Dt
35	15ESKME015	AMAN BAKOLIYA	Amal	Amal	Amal	Amal	Amal	Amal	Amal	Amal
36	15ESKME010	AKANSH KOTHARI	Akansh	Akansh	Akansh	AB	Akansh	Akansh	Akansh	Akansh
37	15ESKME060	GOPAL SHARMA	Gopal	Gopal	Gopal	Gopal	Gopal	Gopal	Gopal	Gopal
38	15ESKME062	GOVIND RAM	Govind	Govind	Govind	Govind	Govind	Govind	Govind	Govind
39	~~15ESKME043~~	~~DINKAL~~	AB	AB	AB	AB	AB	AB	AB	Not attended any session.
40	~~15ESKME[illegible]~~	~~BHUVNESH~~	~~AB~~	~~AB~~	~~AB~~					
		GATE REGISTERED STUDENTS (SEC-B)								
1	15ESKME066	HARSHIT TIWARI	Harshit Tiwari	Harshit Tiwari	Harshit Tiwari	Harshit Tiwari	Harshit Tiwari	Harshit Tiwari	Harshit Tiwari	Harshit Tiwari
2	15ESKME067	HIMANSHU JAIN	Himanshu	Himanshu	Himanshu	Himanshu	Himanshu	Himanshu	Himanshu	Himanshu
3	15ESKME069	HITANSHU BHARDWAJ	Hitanshu	Hitanshu	Hitanshu	Hitanshu	Hitanshu	Hitanshu	Hitanshu	Hitanshu
4	15ESKME071	HRITVIK SHARMA	Hritvik	Hritvik	Hritvik	Hritvik	AB	Hritvik	Hritvik	Hritvik
5	15ESKME073	INDRAJEET SINGH JADON	Indrajeet	Indrajeet	Indrajeet	AB	Indrajeet	Indrajeet	Indrajeet	Indrajeet
6	15ESKME075	JAI PRAKASH SAINI	Jai	Jai	Jai	AB	AB	AB	AB	AB
7	15ESKME076	JAIN SAPAN	AB	AB	AB	AB	AB	AB	AB	AB
8	15ESKME077	JAINAM JAIN	AB	AB	AB	AB	AB	AB	AB	AB
9	15ESKME078	JASWANT SINGH RAWAT	Jaswant	Jaswant	AB	Jaswant	Jaswant	Jaswant	Jaswant	
10	15ESKME081	JITENDER KUMAR YADAV	Jitender	Jitender	Jitender	Jitender	Jitender	Jitender	Jitender	Jitender
11	15ESKME082	KARAN SINGH TANWAR	AB	AB	AB	AB	AB	AB	AB	AB
12	15ESKME083	KARANVEER SINGH RATHORE	AB	Karan	Karan	Karan	Karan	Karan	Karan	Karan
13	15ESKME088	KUNAL RAO INGALE	कुणाल राव	कुणाल राव	कुणाल राव	कुणाल राव	कुणाल राव	कुणाल राव	कुणाल राव	कुणाल राव
14	15ESKME090	LALIT KUMAR	Lalit	Lalit	Lalit	Lalit	Lalit	Lalit	Lalit	Lalit
15	15ESKME092	MANISH KUMAR KUMAWAT	Manish	Manish	Manish	Manish	Manish	Manish	Manish	Manish
16	15ESKME094	MANISH KUMAWAT	Manish	Manish	Manish	Manish	Manish	Manish	Manish	Manish
17	15ESKME096	MANOJ KUMAR BAIRWA	AB	AB	AB	AB	AB	AB	AB	AB

SCR (Dheeraj Josh)

RECORD OF ATTENDANCE OF GATE SESSIONS (IV Sem-Session Jan-June 2017)

S.No.	ROLL NO	NAME OF STUDENT	24/03/017	25/3/17	27/3/17	28/3/17	29/03/017	30/03/2017	31/03/2017	01/04/2017
18	15ESKME097	MANU SAXENA	AB	AB	AB	AB	AB	AB	AB	AB
19	15ESKME098	MAYANK AGGARWAL	Mayank	Mayank	Mayank	Mayank	Mayank	Mayank	Mayank	Mayank
20	15ESKME099	MAYANK JAIN	Mayank	Mayank	Mayank	Mayank	Mayank	Mayank	AB	Mayank
21	15ESKME101	MAYURESH JAIN	mayuresh	Mayuresh	Mayuresh	Mayuresh	AB	AB	AB	AB
22	15ESKME103	MD IMRAN	Md. Imran	Md. Imran	Md. Imran	Md. Imran	Md. Imran	Md. Imran	Md. Imran	Md. Imran
23	15ESKME109	MRINAL MATHUR	AB	Mrinal	Mrinal	Mrinal	Mrinal	Mrinal	Mrinal	Mrinal
24	15ESKME112	NARENDRA BHANDARI	Narendra	Narendra	Narendra	Narendra	Narendra	Narendra	Narendra	Narendra
25	15ESKME113	NARENDRA SINGH	AB	AB	AB	AB	AB	AB	AB	AB
26	15ESKME114	NAVDEEP SINGH NATHAWAT	AB	AB	AB	AB	AB	AB	AB	AB
27	15ESKME115	NIKHIL KUMAR JAIN	[illegible]	[illegible]	[illegible]	[illegible]	[illegible]	[illegible]	[illegible]	[illegible]
28	15ESKME116	NITESH KUMAR GURJAR	AB	AB	AB	AB	AB	AB	AB	AB
29	15ESKME118	NITIN MISHRA	AB	AB	AB	AB	AB	AB	AB	AB
30	15ESKME121	PANKAJ SAIN	[illegible]	[illegible]	[illegible]	[illegible]	[illegible]	[illegible]	AB	[illegible]
31	15ESKME125	PIYUSH AGARWAL	[illegible]	[illegible]	[illegible]	[illegible]	AB	[illegible]	AB	AB
32	15ESKME126	PIYUSH GARG	हर्षितसोनी	हर्षितसोनी	हर्षितसोनी	हर्षितसोनी	हर्षितसोनी	हर्षितसोनी	हर्षितसोनी	हर्षितसोनी
33	15ESKME065	HARSHIT SONI	manoj	manoj	manoj	manoj	manoj	manoj	manoj	manoj
34	15ESKME095	MANOJ DEVANDA	lakshya	lakshya	lakshya	lakshya	lakshya	lakshya	lakshya	AB
35	15ESKME089	LAKSHYA YADAV	kesh	kesh	AB	kesh	kesh	kesh	kesh	kesh
36	15ESKME084	KESHAV MOT	Mohan	Mohan	Mohan	Mohan	Mohan	Mohan	Mohan	Mohan
37	15ESKME105	Mohan Lal Deronda	Mahesh	Mahesh	AB	Mahesh	AB	AB	AB	AB
38	15ESKME091	MAHESH SOLANKA								
3										
		GATE REGISTERED STUDENTS (SEC-C)	24/3	25/3/17	27/3/17	28/3/17	29/3/17	30/3/17	31/3/17	1/4/17
1	15ESKME127	PRAGYA KHANDAL	Khandal	Khandal	Khandal	Khandal	Khandal	Khandal	Khandal	Khandal
2	15ESKME129	PRAMESHWAR LAL PRAJAPAT	[illegible]	[illegible]	[illegible]	[illegible]	[illegible]	[illegible]	[illegible]	[illegible]
3	15ESKME137	RAHUL SAINI (G.R.M.)	Rahul	Rahul	Rahul	Rahul	Rahul	Rahul	Rahul	Rahul
4	15ESKME138	RAHUL SAINI (V.K.S.)	RSaini	RSaini	RSaini	RSaini	RSaini	RSaini	RSaini	RSaini
5	15ESKME139	RAHUL VERMA	Rahul	Rahul	Rahul	Rahul	Rahul	Rahul	Rahul	Rahul
6	15ESKME142	RAJESH KUMAR	Rajesh	Rajesh	Rajesh	Rajesh	Rajesh	Rajesh	Rajesh	Rajesh
7	15ESKME144	RAVI RANJAN KUMAR	Ravi	Ravi	Ravi	Ravi	Ravi	Ravi	Ravi	Ravi
8	15ESKME145	RISHABH SAIN	Rishabh	Rishabh	Rishabh	Rishabh	Rishabh	Rishabh	Rishabh	Rishabh
9	15ESKME148	ROHIT MALVIYA	Rohit	Rohit	Rohit	Rohit	Rohit	Rohit	Rohit	Rohit
10	15ESKME149	ROUNAK DHATTERWAL	Rounak	Rounak	Rounak	Rounak	Rounak	Rounak	Rounak	Rounak
11	15ESKME150	ROUNAK NUWAL	Rounak	Rounak	Rounak	Rounak	Rounak	Rounak	Rounak	Rounak
12	15ESKME154	SANDEEP SINGH	Sandeep	Sandeep	Sandeep	Sandeep	Sandeep	Sandeep	AB	Sandeep
13	15ESKME157	SAVEJ	Mohit Shahra	Mohit Shahra	Mohit Shahra	Mohit Shahra	Mohit Shahra	Mohit Shahra	Mohit Shahra	Mohit
14	15ESKME158	SHAILENDRA SARASWAT	Shailendra	Shailendra	Shailendra	Shailendra	Shailendra	Shailendra	Shailendra	Shailendra
15	15ESKME159	SHAILENDRA SINGH BHATI	Sharad	Sharad	Sharad	Sharad	Sharad	Sharad	Sharad	Sharad
16	15ESKME161	SHIWANI	Shiwani	Shiwani	Shiwani	Shiwani	Shiwani	Shiwani	Shiwani	Shiwani
17	15ESKME162	SHREYANSH GOSWAMI	Shreyansh	Shreyansh	Shreyansh	Shreyansh	Shreyansh	Shreyansh	Shreyansh	Shreyansh
18	15ESKME166	SHUBHAM SAINI	Sai	Sai	Sai	Sai	Sai	Sai	Sai	Sai
19	15ESKME174	SUNIL VERMA	Sunil	Sunil	Sunil	Sunil	Sunil	Sunil	Sunil	Sunil
20	15ESKME175	~~SURESH KUMAR NAGARWAL~~	Suresh	Suresh	Suresh	Suresh	Suresh	Suresh	Suresh	Suresh
21	15ESKME177	~~TARUN JAIN~~	Tarun Jain	Tarun Jain	Tarun Jain	Tarun Jain	Tarun Jain	Tarun Jain	Tarun Jain	Tarun Jain
22	15ESKME178	UTKARSH SHAHU	Utkarsh	Utkarsh	Utkarsh	Utkarsh	Utkarsh	Utkarsh	Utkarsh	Utkarsh
23	15ESKME180	VIKAS GAUR	Vikas	Vikas	Vikas	Vikas	Vikas	Vikas	Vikas	Vikas
24	15ESKME182	VISHAL KUMAR SONI	Vishal Soni	Vishal Soni	Vishal Soni	Vishal Soni	Vishal Soni	Vishal Soni	Vishal Soni	Vishal Soni
25	15ESKME183	VISHNU CHEJARA	Vishnu	Vishnu	Vishnu	Vishnu	Vishnu	Vishnu	Vishnu	Vishnu
26	15ESKME184	VIVEK JANGID	Vivek Jangid	Vivek Jangid	Vivek Jangid	Vivek Jangid	Vivek Jangid	Vivek Jangid	Vivek Jangid	Vivek Jangid
27	15ESKME186	~~YOGESH MAHAWAR~~	Yogesh	Yogesh	Yogesh	Yogesh	Yogesh	Yogesh	Yogesh	Yogesh
28	15ESKME187	YOGESH PRAJAPAT	[illegible]	Yogesh	Yogesh	AB	Yogesh	Yogesh	Yogesh	Yogesh
29	15ESKME188	YUGANSHU SHARMA	[illegible]	[illegible]	[illegible]	[illegible]	[illegible]	[illegible]	[illegible]	[illegible]
30	15ESKME300	VISHAL SHARMA	Vishal	Vishal	Vishal	Vishal	Vishal	Vishal	Vishal	Vishal
31	16ESKME202	MANISH KUMAWAT (D)	मनीष	मनीष	मनीष	मनीष	मनीष	मनीष	मनीष	मनीष
32	16ESKME204	PIYUSH JANGID (D)	Piyush	Piyush	Piyush	Piyush	Piyush	Piyush	Piyush	Piyush
33	16ESKME208	SUNIL KUMAWAT (D)	सुनील कुमावत	सुनील कुमावत	सुनील कुमावत	सुनील कुमावत	सुनील कुमावत	सुनील कुमावत	सुनील कुमावत	सुनील कुमावत
33	16ESKME165	SHUBHAM PRADHAN	Shubham	Shubham	Shubham	Shubham	Shubham	Shubham	Shubham	Shubham
33	16ESKME179	VANSHDEEP SINGH	V.D. Singh	V.D. Singh	V.D. Singh	V.D. Singh	V.D. Singh	V.D. Singh	V.D. Singh	V.D. Singh
33	16ESKME203	NEDA UR REHMAN	AB	Rehman	Rehman	Rehman	AB	Rehman	Rehman	Rehman
33	16ESKME200	APOORV SINHA	Apoorv Sinha	Apoorv Sinha	Apoorv Sinha	Apoorv Sinha	Apoorv Sinha	Apoorv Sinha	Apoorv Sinha	Apoorv Sinha
34	15ESKME136	Rahul Kumar	Rahul	Rahul	Rahul	Rahul	Rahul	Rahul	Rahul	Rahul
35	15ESKME141	Rajeev Sain Marathoiya	Rajeev	Rajeev	Rajeev	Rajeev	Rajeev	Rajeev	Rajeev	Rajeev
36	16ESKME206	Saikh Mohad. Khalid	Khalid	Khalid	Khalid	Khalid	Khalid	Khalid	Khalid	Khalid
37	16ESKME205	Piyush Kumar	Piyush	Piyush	Piyush	Piyush	Piyush	Piyush	Piyush	Piyush
38	15ESKME155	Sanyam Kumar	Sanyam	AB	Sanyam	Sanyam	Sanyam	Sanyam	Sanyam	Sanyam
39	15ESKME147	Rohit Chauhan	[illegible]	[illegible]	[illegible]	[illegible]	[illegible]	[illegible]	[illegible]	AB

Not attended

RECORD OF ATTEND[redacted] GATE SESSIONS (IV Sem-Session Jan-June 2017)

S.No.	ROLL NO	NAME OF S[redacted]	24/03/17	25/3/17	27/3/17	28/3/17	29/3/17	30/3/17	31/3/17	01/04/2017
		[redacted]								
		[redacted]								
	GATE REGISTERED STUDENTS	[redacted]								
1	15ESKME351	MIHIR VIJAYVAR[redacted]	Mihir	Mihir	Mihir	AB	Mihir	Mihir	Mihir	Mihir
2	15ESKME707	AKHILESH KUMA[redacted]	Akhilesh	Akhilesh	Akhilesh	Akhilesh	Akhilesh	Akhilesh	Akhilesh	Akhilesh
3	15ESKME712	ASHOK KUMAR [redacted]	AB	AB	AB	AB	AB	AB	AB	
4	15ESKME714	ASHUTOSH SHUK[redacted]								
5	15ESKME715	BHAV MATHUR	bhm	bhm	bhm	bhm	bhm	bhm	bhm	bhm
6	15ESKME726	KAMLESH KUMAR	Kamlesh	Kamlesh	Kamlesh	Kamlesh	Kamlesh	Kamlesh	Kamlesh	Kamlesh Kumar
7	15ESKME732	MD FAHAD IQUBAL	Fahad Iqubal	Fahad Iqubal	Fahad Iqubal	Fahad Iqubal	Fahad Iqubal	Fahad Iqubal	Fahad Iqubal	Fahad Iqubal
8	15ESKME734	MOHAN RAM JAT	Mohan	Mohan	Mohan	Mohan	Mohan	Mohan	Mohan	Mohan
9	15ESKME735	MRITYUNJAY CHOUBEY	MC	MC	MC	MC	MC	MC	MC	MC
10	15ESKME738	NEMISH BHATT	Nemish	Nemish	Nemish	Nemish	Nemish	Nemish	Nemish	Nemish
11	15ESKME745	RAHUL YADAV	AB	AB	Rahul	Rahul	Rahul	Rahul	Rahul	Rahul
12	15ESKME748	RASHID ANWAR	Rashid	Rashid	Rashid	Rashid	Rashid	Rashid	Rashid	Rashid
13	15ESKME749	RAVI CHOUDHARY	Ravi	Ravi	Ravi	Ravi	Ravi	Ravi	Ravi	Ravi
14	15ESKME750	RISHABH SHARMA	[illegible]	[illegible]	[illegible]	[illegible]	[illegible]	[illegible]	[illegible]	[illegible]
15	15ESKME751	SAGAR KUMAR	Sagar Kumar	Sagar Kumar	Sagar Kumar	Sagar Kumar	Sagar Kumar	Sagar Kumar	Sagar Kumar	Sagar Kumar
16	15ESKME752	SAMPAT SINGH RAWAT	Sampat Singh	Sampat Singh	Sampat Singh	Sampat Singh	Sampat Singh	Sampat Singh	Sampat Singh	Sampat Singh Rawat
17	15ESKME762	YASH VERMA	Yash	Yash	[redacted]	Yash	Yash	Yash		
18	15ESKME717	Chirag Parik	[illegible]	[illegible]	[illegible]	[illegible]	[illegible]	[illegible]	[illegible]	[illegible]
(19)	15ESKME700	Akhilesh kumar	[illegible]	[illegible]	[illegible]	[illegible]	[illegible]	[illegible]	[illegible]	[illegible]
20	15ESKME733	md. Nadim. Akhtar		[redacted]	Nadim	AB	Md. Nadim	Md. Nadim	Md. Nadim	Md. Nadim.
	Signature of Resource Person									
	TOTAL DAILY ATTENDANCE									

Coordinators(GATE Classes_2016-17):
Dheeraj Joshi
Rajendra Singh Chundawat

Sheet - (1)

DEPARTMENT OF MECHANICAL ENGINEERING

RECORD OF ATTENDANCE OF GATE SESSIONS (IV Sem-Session Jan-June 2017)

S.No.	ROLL NO	NAME OF STUDENT	03/04	05/04	06/04	07/04	08/04	10/04	11/04	12/04	13/4
		GATE REGISTERED STUDENTS (SEC-A)									
1	14ESKME024	AYUSH TAK	Ayush	AB	Ayush	Ayush	Ayush	AB	Ayush	Ayush	Ayush
2	15ESKME003	ABHISHEK PALIWAL	Abhishek	Abhishek	Abhishek	Abhishek	Abhishek	Abhishek	Abhishek	A	AB
3	15ESKME004	ABHISHEK TINKER	Abhishek	Abhishek	Abhishek	Abhishek	Abhishek	Abhishek	Abhishek	Adarsh	Adarsh
4	15ESKME006	ADARSH PANSARI	Adarsh	Adarsh	Adarsh	Adarsh	Adarsh	AB	Adarsh	Ajay	Ajay
5	15ESKME008	AJAY KUMAR BAIRWA	Ajay	Ajay	Ajay	Ajay	Ajay	Ajay	Ajay	Ajay	Ajay
6	15ESKME009	AJAY TAWANIA	Ajay	Ajay	Ajay	Ajay	Ajay	Ajay	Ajay	Anay	Anay
7	15ESKME018	ANAY MATHUR	Anay	Anay	Anay	Anay	Anay	Anay	Anay	Ankit	Ankit
8	15ESKME020	ANKIT SAIN	Ankit	Ankit	Ankit	AB	Ankit	Ankit	Ankit	Ankur	Ankur
9	15ESKME021	ANKUR SHARMA	Ankur	Ankur	Ankur	Ankur	Ankur	Ankur	Ankur	Anop	Anop
10	15ESKME022	ANOP MUNDEL	Anop	Anop	Anop	Anop	Anop	Anop	Anop	Arendra	Arendra
11	15ESKME023	ARENDRA SINGH	Arendra	AB	Arendra	Arendra	Arendra	Arendra	Arendra	Arjun	Arjun
12	15ESKME024	ARJUN PATIDAR	Arjun	Arjun	AB	Arjun	Arjun	Arjun	Arjun	Arun	Arun
13	15ESKME025	ARUN MAHAWAR	Arun	Arun	AB	Arun	Arun	Arun	Arun	Avinash	Avinash
14	15ESKME031	AVINASH KUMAR	Avinash	Avinash	Avinash	Avinash	Avinash	Avinash	Avinash	AB	AB
15	15ESKME034	BALDEV SHARMA	AB	AB	AB	AB	AB	AB	AB	Bhanu	Bhanu
16	15ESKME035	BHANU PRATAP SINGH	Bhanu	Bhanu	Bhanu	Bhanu	Bhanu	Bhanu	Bhanu	Chinmay	Chinmay
17	15ESKME037	CHINMAY CHOURDIA	Chinmay	Chinmay	Chinmay	Chinmay	Chinmay	Chinmay	Chinmay	Deepak	Deepak
18	15ESKME041	DEEPAK NOGIA	Deepak	Deepak	Deepak	Deepak	Deepak	Deepak	Deepak	Dev	Dev
19	15ESKME042	DEV VRAT GOSWAMI	Dev	Dev	Dev	Dev	Dev	Dev	Dev	Devendra	Devendra
20	15ESKME043	DEVANSH DIXIT	Devansh	Devansh	Devansh	Devansh	Devansh	Devansh	Devansh	Dev	Dev
21	15ESKME044	DEVENDRA KUMAR	Dev	Dev	Dev	Dev	Dev	Dev	Dev	Dhiraj	Dhiraj
22	15ESKME046	DHIRAJ KUMAR MISHRA	Dheeraj	Dhiraj	Dhiraj	Dhiraj	Dhiraj	Dhiraj	AB	Dikshant	Dikshant
23	15ESKME047	DIKSHANT KHEMANI	AB	Dikshant	Dikshant	Dikshant	Dikshant	Dikshant	Dikshant	Divya	Divya
24	15ESKME051	DIVYA JAIN	Divya	Divya	Divya	Divya	Divya	Divya	Divya	Dushyant	Dushyant
25	15ESKME052	DUSHYANT KARADIA	Dushyant	Dushyant	Dushyant	Dushyant	Dushyant	Dushyant	Dushyant	Ganesh	Ganesh
26	15ESKME054	GANESH PATEL	Ganesh	Ganesh	Ganesh	Ganesh	Ganesh	Ganesh	Ganesh	Gaurav	Gaurav
27	15ESKME055	GAURAV DADHICH	Gaurav	Gaurav	Gaurav	Gaurav	Gaurav	Gaurav	Gaurav	Gaurav	Gaurav
28	15ESKME056	GAURAV MAHESHWARI	Gaurav	Gaurav	Gaurav	Gaurav	Gaurav	Gaurav	Gaurav	Gaurav	Gaurav
29	15ESKME058	GAURAV SHARMA	Gaurav	Gaurav	Gaurav	Gaurav	Gaurav	Gaurav	Gaurav	गोपाल	गोपाल
30	15ESKME059	GOPAL LAL KURI	AB	गोपाल	गोपाल	गोपाल	गोपाल	गोपाल	गोपाल	Gaurav	Gaurav
31	15ESKME061	GOURAV SAINI	Gaurav	Gaurav	Gaurav	Gaurav	Gaurav	Gaurav	Gaurav	Govind	Govind
32	15ESKME036	BHUVNESH CHAND	Govind	Govind	Govind	Govind	Govind	Govind	Govind	Adarsh	Adarsh
33	15ESKME005	ADARSH GOYAL	Adarsh	Adarsh	Adarsh	Adarsh	Adarsh	Adarsh	Adarsh	Dev	Dev
34	15ESKME045	DEVESH M	Dev	Dev	Dev	Dev	Dev	Dev	Dev	Devesh	Devesh
35	15ESKME015	AMAN BAKOLIYA	Devesh	Devesh	Devesh	Devesh	Devesh	Devesh	Devesh	Aman	Aman
36	15ESKME010	AKANSH KOTHARI	Aman	Aman	Aman	Aman	Aman	Aman	Aman	Akansh	Akansh
37	15ESKME060	GOPAL SHARMA	Akansh	Akansh	Akansh	Akansh	Akansh	Akansh	Akansh	Gopal	Gopal
38	15ESKME062	GOVIND RAM	Gopal	Gopal	Gopal	Gopal	Gopal	Gopal	Gopal	AB	Gopal
39	~~15ESKME043~~	~~DINKAR~~	Gopal	Gopal	Gopal	Gopal	Gopal	Gopal	Gopal		
		GATE REGISTERED STUDENTS (SEC-B)									
1	15ESKME066	HARSHIT TIWARI	Harshit Tiwari	Harshit Tiwari	Harshit Tiwari	Harshit Tiwari	Harshit Tiwari	Harshit Tiwari	Harshit Tiwari	Harshit Tiwari	Harshit Tiwari
2	15ESKME067	HIMANSHU JAIN	Himanshu	Himanshu	Himanshu	Himanshu	Himanshu	Himanshu	Himanshu	Himanshu	Himanshu
3	15ESKME069	HITANSHU BHARDWAJ	Hitanshu	Hitanshu	Hitanshu	Hitanshu	Hitanshu	Hitanshu	Hitanshu	Hitanshu	Hitanshu
4	15ESKME071	HRITVIK SHARMA	Hritvik	Hritvik	Hritvik	Hritvik	Hritvik	Hritvik	Hritvik	Hritvik	Hritvik
5	15ESKME073	INDRAJEET SINGH JADON	Indrajeet	Indrajeet	Indrajeet	Indrajeet	Indrajeet	Indrajeet	Indrajeet	Indrajeet	Indrajeet
6	15ESKME075	JAI PRAKASH SAINI	AB	AB	AB	AB	AB	AB	AB	AB	AB
7	15ESKME076	JAIN SAPAN	Sapan	Sapan	Sapan	Sapan	Sapan	Sapan	Sapan	AB	AB
8	15ESKME077	JAINAM JAIN	AB	AB	AB	AB	AB	AB	AB	Jaswant	Jaswant
9	15ESKME078	JASWANT SINGH RAWAT	Jaswant	Jaswant	Jaswant	Jaswant	Jaswant	Jaswant	Jaswant	Jitender	Jitender
10	15ESKME081	JITENDER KUMAR YADAV	Jitender	Jitender	Jitender	Jitender	Jitender	Jitender	Jitender	AB	AB
11	15ESKME082	KARAN SINGH TANWAR	AB	AB	AB	AB	AB	AB	AB	Karan	Karan
12	15ESKME083	KARANVEER SINGH RATHORE	Karan	Karan	Karan	Karan	Karan	Karan	Karan	कुणाल राव	कुणाल राव
13	15ESKME088	KUNAL RAO INGALE	कुणाल राव	कुणाल राव	कुणाल राव	कुणाल राव	कुणाल राव	कुणाल राव	कुणाल राव	Lalit	Lalit
14	15ESKME090	LALIT KUMAR	Lalit	Lalit	Lalit	Lalit	Lalit	Lalit	Lalit	Manish	Manish
15	15ESKME092	MANISH KUMAR KUMAWAT	Manish	Manish	Manish	Manish	Manish	Manish	Manish	Manish	Manish
16	15ESKME094	MANISH KUMAWAT	Manish	Manish	Manish	Manish	Manish	Manish	Manish	AB	AB
17	15ESKME096	MANOJ KUMAR BAIRWA	AB	AB	AB	AB	AB	AB	AB		

RECORD OF ATTENDANCE OF GATE SESSIONS (IV Sem-Session Jan-June 2017)

	ROLL NO	NAME OF STUDENT	03/04/017	05/04/17	6/04/2017	07/04/2017	08/04/017	10/4	11/4	12/4/17	13/04/80
	15ESKME097	MANU SAXENA	AB	AB	AB	AB	AB	AB	AB	AB	AB
	15ESKME098	MAYANK AGGARWAL	Mayk	Mayk	Mayk	Mayk	Mayk	Mayk	Mayk	Mayk	Mayk
	15ESKME099	MAYANK JAIN	Mayank	Mayank	Mayank	Mayank	Mayank	Mayank	Mayank	Mayank	Mayank
21	15ESKME101	MAYURESH JAIN	AB	AB	AB	AB	AB	AB	AB	AB	AB
22	15ESKME103	MD IMRAN	Md. Imran	AB	Md. Imran	Md. Imran	Md. Imran	Md. Imran	Md. Imran	Md. Imran	Md. Imran
23	15ESKME109	MRINAL MATHUR	Mrinal	Mrinal	Mrinal	Mrinal	Mrinal	Mrinal	Mrinal	Mrial.	AB
24	15ESKME112	NARENDRA BHANDARI	Narendra	Narendra	Narendra	Narendra	Narendra	Narendra	AB	Narendra	Narendra
25	15ESKME113	NARENDRA SINGH	AB	AB	AB	AB	AB	AB	AB	AB	AB
26	15ESKME114	NAVDEEP SINGH NATHAWAT	AB	AB	AB	AB	AB	AB	AB	AB	AB
27	15ESKME115	NIKHIL KUMAR JAIN	—	—	—	—	—	—	—	—	—
28	15ESKME116	NITESH KUMAR GURJAR	AB	AB	AB	AB	AB	AB	AB	AB	AB
29	15ESKME118	NITIN MISHRA	AB	AB	AB	AB	AB	AB	AB	AB	AB
30	15ESKME121	PANKAJ SAIN	Pankaj	Pankaj	Pankaj	Pankaj	Pankaj	Pankaj	Pankaj	Pankaj	Pankaj
31	15ESKME125	PIYUSH AGARWAL	Piyush	Piyush	Piyush	Piyush	Piyush	Piyush	Piyush	Piyush	Piyush
32	15ESKME126	PIYUSH GARG	AB	AB	AB	AB	AB	AB	AB	AB	AB
33	15ESKME065	HARSHIT SONI	हर्षित सोनी	हर्षित सोनी	AB	हर्षित सोनी	AB	AB	AB	हर्षित सोनी	हर्षित सोनी
34	15ESKME095	MANOJ DEVANDA	AB	manoj	manoj	manoj	manoj	manoj	manoj	manoj	manoj
35	15ESKME089	LAKSHYA YADAV	Lakshya	Lakshya	Lakshya	Lakshya	Lakshya	Lakshya	Lakshya	Lakshya	Lakshya
36	15ESKME084	KESHAV MOT	Kesh	AB	AB	AB	AB	Kesh	Kesh	AB	Kesh
37	15ESKME091	MOHAN LAL DEVANDA	AB	Mohan	Mohan	Mohan	Mohan	Mohan	Mohan	Mohan.	Mohan
38	15ESKME106	MAHESH SUWALKA	AB	AB	AB	AB	AB	AB	AB	AB	AB
	15ESKME92	Indrabhushan Sharma	AB	AB	Indrabhushan	Indrabhushan	Indrabhushan	Indrabhushan	AB	Indrabhushan	Indrabhushan

GATE REGISTERED STUDENTS (SEC-C)

1	15ESKME127	PRAGYA KHANDAL	Pragya	AB	Pragya	Pragya	Pragya	AB	Pragya	Pragya	Pragya
2	15ESKME129	PRAMESHWAR LAL PRAJAPAT	प्रमेश्वर	प्रमेश्वर	AB	प्रमेश्वर	प्रमेश्वर	प्रमेश्वर	प्रमेश्वर	प्रमेश्वर	AB
3	15ESKME137	RAHUL SAINI (G.R.M.)	Rahul	Rahul	Rahul	Rahul	Rahul	AB	Rahul	Rahul	AB
4	15ESKME138	RAHUL SAINI (V.K.S.)	R'saini	R'saini	R'saini	R'saini	R'saini	AB	R'saini	R'saini	Rajesh
5	15ESKME139	RAHUL VERMA	Rahul	Rahul	Rahul	Rahul	Rahul	Rahul	Rahul	Rahul	
6	15ESKME142	RAJESH KUMAR	Rajesh	Rajesh	Rajesh	Rajesh	Rajesh	AB	Rajesh	Rajesh	Ravi
7	15ESKME144	RAVI RANJAN KUMAR	Ravi	Ravi	Ravi	Ravi	Ravi	AB	Ravi	Ravi	AB
8	15ESKME145	RISHABH SAIN	Rishabh	Rishabh	Rishabh	Rishabh	Rishabh	AB	Rishabh	Rishabh	AB
9	15ESKME148	ROHIT MALVIYA	Rohit	Rohit	Rohit	Rohit	Rohit	AB	Rohit	Rohit	Rohit
10	15ESKME149	ROUNAK DHATTERWAL	Rounak	AB	AB	Rounak	Rounak	AB	Rounak	Rounak	Rounak
11	15ESKME150	ROUNAK NUWAL	Rounak	Rounak	AB	Rounak	Rounak	Rounak	Rounak	Rounak	Rounak
12	15ESKME154	SANDEEP SINGH	Sandeep	Sandeep	Sandeep	Sandeep	Sandeep	AB	Sandeep	Sandeep	Sandeep
13	15ESKME157	SAVEJ	Mohd Shahnawaj	Mohd Shahnawaj	Mohd Shahnawaj	Mohd Shahnawaj	Mohd Shahnawaj	AB	Mohd Shahnawaj	Mohd Shahnawaj	[illegible]
14	15ESKME158	SHAILENDRA SARASWAT	Shailendra	Shailendra	Shailendra	Shailendra	AB	Shailendra	Shailendra	Shailendra	Shailendra
15	15ESKME159	SHAILENDRA SINGH BHATI	Shailendra	Shailendra	Shailendra	Shailendra	AB	AB	Shailendra	Shailendra	Shailendra
16	15ESKME161	SHIWANI	Shiwani	Shiwani	Shiwani	Shiwani	AB	Shiwani	Shiwani	Shiwani	Shiwani
17	15ESKME162	SHREYANSH GOSWAMI	Shreyansh	AB	AB	Shreyansh	Shreyansh	AB	Shreyansh	Shreyansh	Shreyansh
18	15ESKME166	SHUBHAM SAINI	Shubham	AB	Shubham	Shubham	Shubham	Shubham	Shubham	Shubham	Shubham
19	15ESKME174	SUNIL VERMA	Sunil	Sunil	Sunil	Sunil	Sunil	AB	Sunil	Sunil	Sunil
20	15ESKME175	SURESH KUMAR NAGARWAL	Suresh	Suresh	Suresh	Suresh	Suresh	AB	Suresh	AB	Suresh
21	15ESKME177	TARUN JAIN	Tarun Jain	Tarun Jain	AB	Tarun Jain	Tarun Jain	AB	Tarun Jain	Tarun Jain	Tarun Jain
22	15ESKME178	UTKARSH SHAHU	Utkarsh	Utkarsh	Utkarsh	Utkarsh	Utkarsh	Utkarsh	Utkarsh	Utkarsh	Utkarsh
23	15ESKME180	VIKAS GAUR	Vikas	Vikas	Vikas	Vikas	Vikas	Vikas	Vikas	Vikas	Vikas
24	15ESKME182	VISHAL KUMAR SONI	Vishal Soni	AB	Vishal Soni	Vishal Soni	Vishal Soni	Vishal Soni	Vishal Soni	Vishal Soni	Vishal Soni
25	15ESKME183	VISHNU CHEJARA	Vishnu	Vishnu	Vishnu	Vishnu	Vishnu	AB	Vishnu	Vishnu	Vishnu
26	15ESKME184	VIVEK JANGID	Vivek Jangid	Vivek Jangid	Vivek Jangid	Vivek Jangid	Vivek Jangid	AB	Vivek Jangid	Vivek Jangid	Vivek Jangid
27	15ESKME186	YOGESH MAHAWAR	Yogesh	Yogesh	Yogesh	Yogesh	AB	AB	Yogesh	AB	Yogesh
28	15ESKME187	YOGESH PRAJAPAT	AB	AB	Yogesh	Yogesh	Yogesh	AB	Yogesh	Yogesh	Yogesh
29	15ESKME188	YUGANSHU SHARMA	Yuganshu	Yuganshu	Yuganshu	Yuganshu	Yuganshu	AB	AB	Yuganshu	Yuganshu
30	15ESKME300	VISHAL SHARMA	Vishal	Vishal	Vishal	Vishal	Vishal	AB	Vishal	Vishal	Vishal
31	16ESKME202	MANISH KUMAWAT (D)	Manish	Manish	Manish	Manish	AB	AB	AB	Manish	Manish
32	16ESKME204	PIYUSH JANGID (D)	Piyush	Piyush	Piyush	AB	Piyush	Piyush	Piyush	Piyush	Piyush
33	16ESKME208	SUNIL KUMAWAT (D)	सुनील कुमावत	सुनील कुमावत	सुनील कुमावत	सुनील कुमावत	सुनील कुमावत	सुनील कुमावत	सुनील कुमावत	सुनील कुमावत	सुनील कुमावत
33	16ESKME165	SHUBHAM PRADHAN	Shubham	AB	AB	Shubham	Shubham	Shubham	Shubham	Shubham	Shubham
33	16ESKME179	VANSHDEEP SINGH	AB	AB	V.D. Singh	V.D. Singh	V.D. Singh	V.D. Singh	V.D. Singh	V.D. Singh	V.D. Singh
33	16ESKME203	NEDA UR REHMAN	Neha	Neha	AB	Neha	Neha	Neha	Neha	Neha	Neha
33	16ESKME200	APOORV SINHA	Apoorv Sinha	Apoorv Sinha	Apoorv Sinha	Apoorv Sinha	Apoorv Sinha	Apoorv Sinha	Apoorv Sinha	Apoorv Sinha	Apoorv Sinha
34	16ESKME136	RAHUL KUMAR	Rahul	Rahul	Rahul	Rahul	Rahul	AB	Rahul	Rahul	Rajeev
35	16ESKME141	RAJEEV SAIN	Rajeev	Rajeev	Rajeev	Rajeev	Rajeev	AB	Rajeev	Rajeev	Khalid
36	16ESKME206	SHEIKH MD KHALID	Khalid	Khalid	Khalid	Khalid	Khalid	AB	Khalid	Khalid	
37	16ESKME205	PIYUSH KUMAR	Piyush	Piyush	AB	Piyush	Piyush	AB	AB	Piyush	Piyush

RECORD OF ATTENDANCE OF GATE SESSIONS (IV Sem-Session Jan-June 2017)

	ROLL NO	NAME OF STUDENT						10/4/17	11-4-17	12/4/17	13/4/17
	15ESKME155	SARWAN KUMAR		AB	AB						AB
	GATE REGISTERED STUDENTS (SEC-S)										
1	15ESKME351	MIHIR VIJAYVARGIYA						AB	AB		
2	15ESKME707	AKHILESH KUMAR									
3	15ESKME712	ASHOK KUMAR MALI		AB	AB	AB	AB	AB	AB	AB	AB
4	15ESKME714	ASHUTOSH SHUKLA									
5	15ESKME715	BHAV MATHUR						AB	AB		
6	15ESKME726	KAMLESH KUMAR									
7	15ESKME732	MD FAHAD IQUBAL									
8	15ESKME734	MOHAN RAM JAT									
9	15ESKME735	MRITYUNJAY CHOUBEY									
10	15ESKME738	NEMISH BHATT									
11	15ESKME745	RAHUL YADAV									
12	15ESKME748	RASHID ANWAR									
13	15ESKME749	RAVI CHOUDHARY									
14	15ESKME750	RISHABH SHARMA		AB							
15	15ESKME751	SAGAR KUMAR									
16	15ESKME752	SAMPAT SINGH RAWAT		AB							
17	15ESKME762	YASH VERMA									
18	15ESKME717	CHIRAG PAREEK									
19	15ESKME700	ASHISH KUMAR									
20	15ESKME733	MD NADIM AKHTAR						Nadim			
	Signature of Resource Person										
	TOTAL DAILY ATTENDANCE										

Coordinators(GATE Classes_2016-17):

Dheeraj Joshi

Rajendra Singh Chundawat

SWAMI KESHVANAND INSTITUTE OF TECHNOLOGY
MANAGEMENT & GRAMOTHAN

Students appearing in GATE 2021

S. No.	Roll No.	Name of Student
1	17ESKEE002	Abhijeet parashar
2	17ESKEE004	Abhishek Kumar Meena
3	17ESKEE007	Akshat Govil
4	17ESKEE008	Akshit Panchal
5	17ESKEE016	Anuj Nama
6	17ESKEE020	Ayush Gautam
7	17ESKEE026	Devanshu Gupta
8	17ESKEE031	Gajraj Mandawat
9	17ESKEE032	Gajraj Singh Rajput
10	17ESKEE034	Harsha Khandelwal
11	17ESKEE035	Harshit Gautam
12	17ESKEE038	Ikshansh Vashist
13	17ESKEE041	Jayesh Sharma
14	17ESKEE042	Jayesh Singh Sagar
15	17ESKEE049	Lovish Bansal
16	17ESKEE051	Manas Jain
17	17ESKEE054	Meenakshi Meena
18	17ESKEE056	Mukul Saini
19	17ESKEE059	Nikhil Jain
20	17ESKEE060	Nilesh Kumar Sharma
21	17ESKEE065	Palak Gupta
22	17ESKEE066	Piyush Satiwal
23	17ESKEE076	Rohit Arora
24	17ESKEE 069	Pramod Meena
25	17ESKEE116	Vishnu Datt Swami
26	17ESKEE105	Tarun Kumar Mahawar
27	17ESKEE124	Yashaswi Mathur
28	17ESKEE104	Tanushri Prajapati
29	17ESKEE709	Anisha Agrawal
30	17ESKEE704	Aditya Dadhich
31	17ESKEE350	Shubham Sharma

Swami Keshvanand Institute of Technology, Management &Gramothan, Jaipur

(Department of Electrical Engineering)

List of student appeared in GATE 2020 Exam

S.No	Roll No.	Name of student
1	16ESKEE084	Parikha Sharma
2	16ESKEE400	Unnati
3	16ESKEE082	Nupoor Singh Meena
4	16ESKEE051	Madhvendra Singh
5	16ESKEE049	Lalit Kishore Tiwari
6	16ESKEE019	Ankit Sagar
7	16ESKEE015	Akshay Kumar
8	16ESKEE115	Shubro Chakraborty
9	16ESKEE102	Rupanshu Arora
10	16ESKEE702	Abhishek Sharma
11	16ESKEE714	Deeksha Bhargava
12	16ESKEE759	Yash Jain
13	16ESKEE750	Sagar Jain
14	16ESKEE741	Piyush Prajapat
15	16ESKEE081	Nitish Kumar Thapar
16	16ESKEE017	Ankit Dhayal
17	16ESKEE746	Pulkit Jain
18	16ESKEE734	Muzzafar Iqbal
19	16ESKEE059	Manmohan Singh Shekhawat
20	16ESKEE110	Shekhar Kumar Singh
21	16ESKEE098	Ravi Shankar Verma
22	16ESKEE097	Ravi Jain
23	16ESKEE107	Saurabh Jangid
24	16ESKEE113	Shubham Nagar
25	16ESKEE103	Sachin Ghasolia
26	16ESKEE033	Gaurav Soni
27	16ESKEE060	Manvendra Singh Rathore
28	16ESKEE041	Himanshu Awasthi
29	16ESKEE008	Adil Rayees Ansari
30	16ESKEE014	Akshat Joshi
31	16ESKEE752	Shubham Mathur
32	16ESKEE712	Brijendra Mehra
33	16ESKEE708	Ashish Kumar Pathak
34	16ESKEE725	Kuldeep Singh
35	16ESKEE711	Avik Sharma
36	16ESKEE713	Chetan Kumar Regar
37	16ESKEE701	Abhishek Sharma
38	16ESKEE723	Kartik Tank
39	16ESKEE715	Deepak Agarwal
40	16ESKEE065	Mohd Danish
41	16ESKEE730	Manish Malav

S.No	Roll No.	Name of student
42	16ESKEE740	Pawan Sharma
43	16ESKEE726	Labhesh Jain
44	16ESKEE718	Divyansh Jain
45	16ESKEE735	Nandkishore Soni
46	16ESKEE118	Shushil Kumar Sharma
47	16ESKEE751	Sanjay Sharma
48	16ESKEE114	Shubham Sharma
49	16ESKEE079	Nikita Saini
50	16ESKEE036	Harsh Haldiya
51	16ESKEE038	Harsh Vardhan Bairagi
52	16ESKEE729	Manish Kucheria
53	16ESKEE088	Pragya Jain
54	16ESKEE300	Ashish Yadav
55	16ESKEE737	Nishpax Jain
56	16ESKEE732	Mayank Singh Panwar
57	16ESKEE733	Mitin Soni
58	16ESKEE749	Rinku Meena
59	16ESKEE721	Himanshu Jain
60	16EEKEE722	Himanshu Soni
61	16EEKEE301	Aman Kumar Sharma
62	16ESKEE011	Aditya Sharma
63	16ESKEE028	Darshan Sharma
64	16ESKEE020	Anshu Dhaka
65	16ESKEE010	Aditya Kumar Gupta
66	16ESKEE709	Ashish Sain
67	16ESKEE760	Yash Sharma
68	16ESKEE702	Abhishek Sharma
69	16ESKEE739	Pawan Kumar
70	16ESKEE756	Taruna Garg
71	16ESKEE058	Manmohan Singh
72	16ESKEE101	Roopal Singh
73	16ESKEE093	Rajat Agrawal
74	16ESKEE091	Radhika Agrawal
75	16ESKEE080	Nimish Upadhyay
76	16ESKEE111	Shrayansh Bhardwaj
77	16ESKEE042	Heena Khatri
78	16ESKEE057	Manish Sharma
79	16ESKEE094	Rakesh Choudhary
80	16ESKEE108	Shaiphali Maheshwari
81	16ESKEE002	Ayushi Meena
82	16ESKEE055	Manish Faujdar
83	16ESKEE009	Aditya Chauhan

S.No	Roll No.	Name of student
84	16ESKEE117	Sunita Choudhary
85	16ESKEE745	Priya Gupta
86	16ESKEE703	Anmol Kumar Joshi
87	16ESKEE061	Mayank Gupta

List of student appeared in GATE 2019 Exam

S.No	Roll No.	Name of student
1	15ESKEE728	Md Asif Ansari
2	15ESKEE118	Vidhi Sharma
3	15ESKEE712	Chandan Kumawat
4	15ESKEE710	Arun Kumar Sahu
5	15ESKEE703	Aditya Kumar Mehta
6	15ESKEE715	Himashu Mahaveer
7	15ESKEE710	Rahul Singh Naruka
8	15ESKEE752	Shital Meena
9	15ESKEE015	Aryan Godara
10	15ESKEE019	Balram Sen
11	15ESKEE724	Kuldeep Sharma
12	15ESKEE077	Pooja Kala
13	15ESKEE081	Pranshul
14	15ESKEE078	Poonam Shekawat
15	15ESKEE117	Ujjawal Kumar
16	15ESKEE115	Tinkal Meena
17	15ESKEE717	Gaurang Garg
18	15ESKEE087	Priya Sharma
19	15ESKEE104	Shashank Mittal
20	15ESKEE018	Ayush Singhaniya
21	15ESKEE062	Monika Meena
22	15ESKEE011	Ankita Sharma
23	15ESKEE010	Anisha Bansal
24	15ESKEE205	Sushil Jhakr
25	15ESKEE073	Nitin Chandel
26	15ESKEE064	Naman Sharma
27	15ESKEE022	Bhumika Gautam
28	15ESKEE049	Kumar Amit
29	15ESKEE008	Animesh Sharma
30	15ESKEE003	Abhishek
31	15ESKEE023	Bhunesh Dhakr
32	15ESKEE057	Md. Hiddayutullah
33	15ESKEE060	Arif Chauahn
34	15ESKEE061	Md. Danish
35	15ESKEE016	Asif Khan
36	15ESKEE729	Md. Rizwan
37	15ESKEE053	Mangati Ram
38	15ESKEE052	Manan Saxena
39	15ESKEE738	Prithvi Shekhawat
40	15ESKEE727	Manmohit Mangawa

Swami Keshvanand Institute of Technology, Management &Gramothan, Jaipur

(Department of Electrical Engineering)

S.No	Roll No.	Name of student
41	15ESKEE754	Shubham Tailang
42	15ESKEE740	Punit Sharma
43	15ESKEE737	Preeti Lavaniya
44	15ESKEE352	Sagar Kumar San variya
45	15ESKEE743	Reeta Dulait
46	15ESKEE074	Parul Vikash
47	15ESKEE102	Sharad Singhal
48	15ESKEE722	Kuldeep
49	15ESKEE121	Vinod Kumar
50	15ESKEE111	Sumit Tailor
51	15ESKEE071	Nishant
52	15ESKEE097	Rishabh Jain
53	15ESKEE070	Nilesh Behplawat
54	15ESKEE069	Nikhilesh Parashar
55	15ESKEE101	Santosh Kumar
56	15ESKEE036	Himmat Singh
57	15ESKEE032	Gargy Swami
58	15ESKEE026	Deepak Sharma
59	15ESKEE012	Anurag Zindal
60	15ESKEE020	Bharat Bhardwaj
61	15ESKEE039	Ishant Bhatiya
62	15ESKEE045	Kamlesh Kumar
63	15ESKEE351	Rajendra Singh
64	15ESKEE761	Virendra Singh
65	15ESKEE748	Rohit Kumar
66	15ESKEE749	Sachin Sharma
67	15ESKEE756	Shubham Malav
68	15ESKEE059	Shafaqe Anjum
69	15ESKEE027	Deepak Suthar
70	15ESKEE035	Himank Sharma
71	15ESKEE714	Deepak Jangid
72	15ESKEE716	Garvit Sharma
73	15ESKEE705	Ajay Singh
74	15ESKEE713	Chaavi Agrwal
75	15ESKEE718	Gunjan Sharma
76	15ESKEE736	Pratishtha Hada
77	15ESKEE067	Naresh Singodiya
78	15ESKEE093	Rajat Jagid
79	15ESKEE200	Kailash Chand
80	15ESKEE720	Palak Joshi
81	15ESKEE107	Shubhra Singh
82	15ESKEE112	Sunil Sharma

S.No	Roll No.	Name of student
83	15ESKEE204	Shweta Meena
84	15ESKEE099	Sangeeta Meena
85	15ESKEE021	Bhavya Jain
86	15ESKEE075	Pawan Khatik
87	15ESKEE013	Apurav Vaishanv
88	15ESKEE735	Parth Joshi

GATE 2020 Scorecard

Graduate Aptitude Test in Engineering

Name

KARTIK TANK

Registration Number

EE20S53015165

Examination Paper

Electrical Engineering (EE)

Kartik Tank

(Candidate's Signature)

Marks out of 100*	44	**Qualifying Marks****	33.4 (GEN/EWS)	30.0 (OBC (NCL))	22.2 (SC/ST/PwD)
All India Rank in this paper	5926	**Number of Candidates appeared in this paper**	93526		
GATE Score	485	**Valid from March 18, 2020 to March 17, 2023**			

Qualified

March 18, 2020

* Normalized marks for Civil Engineering and Mechanical Engineering Papers

** A candidate is considered qualified if the marks secured are greater than or equal to the qualifying marks mentioned for the category for which valid category certificate, if applicable, is produced along with this scorecard

Prof. B. R. Chahar
Organizing Chairman, GATE 2020
(on behalf of NCB – GATE, for MHRD)

5d333aed0e950ca99d68ead86edccc73

Qualifying in GATE 2020 does not guarantee either an admission to a post-graduate programme or a scholarship/assistantship. Admitting institutes may conduct further tests or interviews for final selection.

In the GATE 2020, the qualifying marks for a general category candidate in each paper is $\mu + \sigma$ or 25 marks (out of 100), whichever is greater, where μ is the mean and σ is the standard deviation of marks of all the candidates who appeared in the paper. The qualifying marks for OBC(NCL) and SC/ST/PwD candidates are 90% and two-third of a general category candidate in the paper respectively.

The GATE 2020 score was calculated using the formula

$$GATE\ Score = S_q + (S_t - S_q)\frac{(M - M_q)}{(\bar{M}_t - M_q)}$$

where

M is marks (out of 100) obtained by the candidate in the paper

M_q is the qualifying marks for general category candidate in the paper

$\bar{M}_t$ is the mean of marks of top 0.1% or top 10 (whichever is greater) of the candidates who appeared in the paper (in case of multi-session papers including all sessions)

$S_q = 350$, is the score assigned to M_q

$S_t = 900$, is the score assigned to $\bar{M}_t$

In multi-session (Civil Engineering and Mechanical Engineering) papers, the normalized mark of jth candidate in the ith session $\hat{M}_{ij}$ was computed using the formula

$$\hat{M}_{ij} = \frac{\bar{M}_t^g - M_q^g}{\bar{M}_{ti} - M_{iq}}(M_{ij} - M_{iq}) + M_q^g$$

where

M_{ij} is the actual marks obtained by the jth candidate in i^{th} session

$\bar{M}_t^g$ is the average marks of the top 0.1% of the candidates considering all sessions

M_q^g is the sum of mean and standard deviation marks of the candidates in the paper considering all sessions

$\bar{M}_{ti}$ is the average marks of the top 0.1% of the candidates in the ith session

M_{iq} is the sum of the mean marks and standard deviation of the ith session

Graduate Aptitude Test in Engineering (GATE) 2020 was organised by Indian Institute of Technology Delhi on behalf of the National Coordination Board (NCB) – GATE for the Department of Higher Education, Ministry of Human Resources Development (MHRD), Government of India.

GATE 2020 Scorecard

Graduate Aptitude Test in Engineering

Name

DEEPAK AGRAWAL

Registration Number

EE20S53022116

Examination Paper

Electrical Engineering (EE)

दीपक अग्रवाल

(Candidate's Signature)

Marks out of 100*	**57**	**Qualifying Marks****	**33.4** GEN/EWS	**30.0** OBC (NCL)	**22.2** SC/ST/PwD
All India Rank in this paper	**1448**	**Number of Candidates appeared in this paper**	**93526**		
GATE Score	**652**	**Valid from March 18, 2020 to March 17, 2023**			

Qualified

March 18, 2020

* Normalized marks for Civil Engineering and Mechanical Engineering Papers

** A candidate is considered qualified if the marks secured are greater than or equal to the qualifying marks mentioned for the category for which valid category certificate, if applicable, is produced along with this scorecard

Prof. B. R. Chahar
Organizing Chairman, GATE 2020
(on behalf of NCB – GATE, for MHRD)

619f68dcdb9458da0c52386c7d10607d

Qualifying in GATE 2020 does not guarantee either an admission to a post-graduate programme or a scholarship/assistantship. Admitting institutes may conduct further tests or interviews for final selection.

In the GATE 2020, the qualifying marks for a general category candidate in each paper is $\mu + \sigma$ or 25 marks (out of 100), whichever is greater, where μ is the mean and σ is the standard deviation of marks of all the candidates who appeared in the paper. The qualifying marks for OBC(NCL) and SC/ST/PwD candidates are 90% and two-third of a general category candidate in the paper respectively.

The GATE 2020 score was calculated using the formula

$$GATE\ Score = S_q + (S_t - S_q)\frac{(M - M_q)}{(\bar{M}_t - M_q)}$$

where

M is marks (out of 100) obtained by the candidate in the paper

M_q is the qualifying marks for general category candidate in the paper

$\bar{M}_t$ is the mean of marks of top 0.1% or top 10 (whichever is greater) of the candidates who appeared in the paper (in case of multi-session papers including all sessions)

$S_q = 350$, is the score assigned to M_q

$S_t = 900$, is the score assigned to $\bar{M}_t$

In multi-session (Civil Engineering and Mechanical Engineering) papers, the normalized mark of jth candidate in the ith session $\hat{M}_{ij}$ was computed using the formula

$$\hat{M}_{ij} = \frac{\bar{M}_t^g - M_q^g}{\bar{M}_{ti} - M_{iq}}(M_{ij} - M_{iq}) + M_q^g$$

where

M_{ij} is the actual marks obtained by the jth candidate in i^{th} session

$\bar{M}_t^g$ is the average marks of the top 0.1% of the candidates considering all sessions

M_q^g is the sum of mean and standard deviation marks of the candidates in the paper considering all sessions

$\bar{M}_{ti}$ is the average marks of the top 0.1% of the candidates in the ith session

M_{iq} is the sum of the mean marks and standard deviation of the ith session

Graduate Aptitude Test in Engineering (GATE) 2020 was organised by Indian Institute of Technology Delhi on behalf of the National Coordination Board (NCB) – GATE for the Department of Higher Education, Ministry of Human Resources Development (MHRD), Government of India.

GATE 2020 Scorecard

Graduate Aptitude Test in Engineering

Name

KULDEEP SINGH

Registration Number

EE20S53022081

Examination Paper

Electrical Engineering (EE)

(Candidate's Signature)

Marks out of 100*	**41.67**	**Qualifying Marks****	**33.4** GEN/EWS	**30.0** OBC (NCL)	**22.2** SC/ST/PwD
All India Rank in this paper	**7306**	**Number of Candidates appeared in this paper**	**93526**		
GATE Score	**456**	**Valid from March 18, 2020 to March 17, 2023**			

Qualified

March 18, 2020

* Normalized marks for Civil Engineering and Mechanical Engineering Papers

** A candidate is considered qualified if the marks secured are greater than or equal to the qualifying marks mentioned for the category for which valid category certificate, if applicable, is produced along with this scorecard

Prof. B. R. Chahar
Organizing Chairman, GATE 2020
(on behalf of NCB – GATE, for MHRD)

091c82686e84cf428fa5ed4622072a21

Qualifying in GATE 2020 does not guarantee either an admission to a post-graduate programme or a scholarship/assistantship. Admitting institutes may conduct further tests or interviews for final selection.

In the GATE 2020, the qualifying marks for a general category candidate in each paper is $\mu + \sigma$ or 25 marks (out of 100), whichever is greater, where μ is the mean and σ is the standard deviation of marks of all the candidates who appeared in the paper. The qualifying marks for OBC(NCL) and SC/ST/PwD candidates are 90% and two-third of a general category candidate in the paper respectively.

The GATE 2020 score was calculated using the formula

$$GATE\ Score = S_q + (S_t - S_q)\frac{(M - M_q)}{(\bar{M}_t - M_q)}$$

where

M is marks (out of 100) obtained by the candidate in the paper

M_q is the qualifying marks for general category candidate in the paper

$\bar{M}_t$ is the mean of marks of top 0.1% or top 10 (whichever is greater) of the candidates who appeared in the paper (in case of multi-session papers including all sessions)

S_q = 350, is the score assigned to M_q

S_t = 900, is the score assigned to $\bar{M}_t$

In multi-session (Civil Engineering and Mechanical Engineering) papers, the normalized mark of jth candidate in the ith session $\hat{M}_{ij}$ was computed using the formula

$$\hat{M}_{ij} = \frac{\bar{M}_t^g - M_q^g}{\bar{M}_{ti} - M_{iq}}(M_{ij} - M_{iq}) + M_q^g$$

where

M_{ij} is the actual marks obtained by the jth candidate in i^{th} session

$\bar{M}_t^g$ is the average marks of the top 0.1% of the candidates considering all sessions

M_q^g is the sum of mean and standard deviation marks of the candidates in the paper considering all sessions

$\bar{M}_{ti}$ is the average marks of the top 0.1% of the candidates in the ith session

M_{iq} is the sum of the mean marks and standard deviation of the ith session

Graduate Aptitude Test in Engineering (GATE) 2020 was organised by Indian Institute of Technology Delhi on behalf of the National Coordination Board (NCB) – GATE for the Department of Higher Education, Ministry of Human Resources Development (MHRD), Government of India.

Swami Keshvanand Institute of Technology, Management & Gramothan
Ramnagaria Jagatpura, Jaipur
Department of Electrical Engineering

SKIT/DEE/2020/

Date: 17.08.2020

NOTICE

Department of Electrical Engineering is organizing GATE classes for all students of II, III & IV year. Interested students kindly give their names to Batch Counselor. A separate section will be made as GATE Section at the department level. The detailed time table has been placed on department notice board.

Dr. Dhanraj Chitara
HOD EE

Copy to:

- Head
- All Faculty
- Notice File
- Notice Board

GATE 2021 Syllabus for Electrical Engineering

Section 1:

Engineering Mathematics

Linear Algebra: Matrix Algebra, Systems of linear equations, Eigenvalues, Eigenvectors Calculus: Mean value theorems, Theorems of integral calculus, Evaluation of definite and improper integrals, Partial Derivatives, Maxima and minima, Multiple integrals, Fourier series, Vector identities, Directional derivatives, Line integral, Surface integral, Volume integral, Stokes's theorem, Gauss's theorem, Divergence theorem, Green's theorem. Differential equations: First order equations (linear and nonlinear), Higher order linear differential equations with constant coefficients, Method of variation of parameters, Cauchy's equation, Euler's equation, Initial and boundary value problems, Partial Differential Equations, Method of separation of variables. Complex variables: Analytic functions, Cauchy's integral theorem, Cauchy's integral formula, Taylor series, Laurent series, Residue theorem, Solution integrals. Probability and Statistics: Sampling theorems, Conditional probability, Mean, Median, Mode, Standard Deviation, Random variables, Discrete and Continuous distributions, Poisson distribution, Normal distribution, Binomial distribution, Correlation analysis, Regression analysis

Section 2:

Electric circuits Network elements: ideal voltage and current sources, dependent sources, R,L, C, M elements; Network solution methods: KCL, KVL, Node and Mesh analysis; Network Theorems: Thevenin's, Norton's, Superposition and Maximum Power Transfer theorem, Transient response of de sinusoidal steady-state analysis, resonance, two-port networks, balanced three-phase circuits, star-delta transformation, complex power and power and ac networks, factor in ac circuits.

Section 3:

Electromagnetic Fields: Coulomb's Law, Electric Field Intensity, Electric Flux Density Gauss's Law, Divergence, Electric field and potential due to point, line, plane and spherical charge distributions, Effect of the dielectric medium, Capacitance of simple configurations, Biot-Savart's law, Ampere's law, Curl, Faraday's law, Lorentz force, Inductance,

Magnetomotive force, Reluctance, Magnetic circuits, Self and Mutual inductance of simple configurations.

Section 4:

Signals and Systems: Representation of continuous and discrete-time signals, shifting and scaling properties, linear time-invariant and causal systems, Fourier series representation of continuous and discrete-time periodic signals, sampling theorem, Applications of Fourier Transform for continuous and discrete-time signals, Laplace Transform and Z transform.

Section 5

Electrical Machines:

Single phase transformer: equivalent circuit, phasor diagram, open circuit and short circuit tests, regulation and efficiency Three-phase transformers: connections, vector groups, parallel operation; Auto-transformer, Electromechanical energy conversion principles; DC machines: separately excited, series and shunt, motoring and generating mode of operation and their characteristics, speed control of dc motors; Three-phase induction machines: principle of operation, types, performance, torque-speed characteristics, no-load and blocked-rotor tests, equivalent circuit, starting and speed control; Operating principle of single-phase induction motors; Synchronous machines: cylindrical and salient pole machines, performance and characteristics, regulation and parallel operation of generators, starting of synchronous motors; Types of losses and efficiency calculations of electric machines

Section 6:

Power Systems: Basic concepts of electrical power generation, ac and dc transmission concepts, Models and performance of transmission lines and cables, Series and shunt compensation, Electric field distribution and insulators, Distribution systems, Per-unit quantities, Bus admittance matrix, Gauss-Seidel and Newton-Raphson load flow methods, Voltage and Frequency Control, Power factor correction, Symmetrical components, Symmetrical and unsymmetrical faut analysis, Principles of overcurrent, differential, directional and distance protection; Circuit breakers, System stability concepts, Equal area criterion, Economic Load Dispatch (with and without considering transmission losses).

Section 7:

Control Systems: Mathematical modelling and representation of systems, Feedback principle, transfer function, Block diagrams and Signal flow graphs, Transient and Steady-state analysis of linear time invariant systems, Stability analysis using Routh Hurwitz and Nyquist criteria, Bode plots, Root loci, Lag, Lead and Lead-Lag compensators; P, Pl and PID controllers; State-space model, Solution of state equations of LTI systems, R.M.S. value, average value calculation for any general periodic waveform.

Section 8:

Electrical and Electronic Measurements: Bridges and Potentiometers, Measurement of voltage, current, power, energy and power factor; Instrument transformers, Digital voltmeters and multimeters, Phase, Time and Frequency measurement; Oscilloscopes, Error analysis.

Section 9:

Analog and Digital Electronics: Simple diode circuits: clipping, clamping, rectifiers Amplifiers: biasing, equivalent circuit and frequency response; oscillators and feedback amplifiers; operational amplifiers: characteristics and applications; single-stage active filters, Sallen Key. Butterworth, VCOs and timers, combinatorial and sequential logic circuits, multiplexers, demultiplexers, Schmitt triggers, sample and hold circuits, A/D and D/A converters.

Section 10:

Power Electronics Static V characteristics and firing/gating circuits for Thyristor, MOSFET, IGBT; DC to DC conversion: Buck, Boost and Buck-Boost Converters; Single and three-phase configuration of uncontrolled rectifiers; Voltage and Current commutated Thyristor based converters; Bidirectional ac to dc voltage source converters; Magnitude and Phase of line current harmonics for uncontrolled and thyristor-based converters; Power factor and Distortion Factor of ac to dc converters; Single-phase and three-phase voltage and current source inverters, sinusoidal pulse width modulation.

Swami Keshvanand Institute of Technology, M&G, Jaipur

2020-21 (odd Sem)

III-EE-A

DEPARTMENT OF ELECTRICAL ENGINEERING

SKIT असतो मा सद्गमय

	08:30 - 09:30	09:45 - 10:45	11:00 - 12:00	01:30 - 02:30	02:45 - 03:45
Mo	III-IT (Group 1) AD III-IT (Group 2) BB	MEFA SM	ECA DC	EMF AD	
Tu	AE YS	EMF AD	AEM-1 CPJ	PGP JSG	
We	AEM-1 CPJ	MEFA SM	M/c LAB AN	EM-1 BM	
Th	CKT LAB BB	PGP JSG	ECA DC	EM-1 BM	
Fr	AE YS	AEM-1 CPJ	SS GP	EMF AD	
Sa	AE YS	AE LAB YS	ECA DC	EM-1 BM	

Timetable generated: 10/5/2020

aSc Timetables

AD - Mr.AKASH DEO
AN - Mr.ARUN NAYAK
BB - Ms.BAIBHAV BISHAL
BM - Mr.BHARAT MODI
CPJ - Mr.C.P.Jain
DC - Mr.DHANRAJ CHITARA
GP - Mrs. GEETIKA PATNI
JSG - Mr.JITENDRA SINGH
SM - Dr. SANJEEV MATHUR
YS - Md.YUSUF SHAREEF

AE LAB - ANALOG ELECTRONICS LAB
AE - ANALOG ELECTRONICS
AEM-1 - ADVANCE ENGINEERING MATHEMATICS-1
CKT LAB - ELECTRICAL CIRCUIT LAB
ECA - ELECTRICAL CIRCUIT ANALYSIS
EM-1 - ELECTRICAL MACHINES-1
EMF - ELECTROMAGNETIC FIELD
III-IT - III-INDUSTRIAL TRAINING SEMINAR
M/c LAB - MACHINE LAB

Swami Keshvanand Institute of Technology, M&G, Jaipur

V-EE-A

SKIT असतो मा सद्गमय

DEPARTMENT OF ELECTRICAL ENGINEERING

	08:30 - 09:30	09:45 - 10:45	11:00 - 12:00	01:30 - 02:30	02:45 - 03:45
Mo		MP MN		RPS PJ	CS AB
Tu	EMD AN	PS-I TC		SP LAB PJ	CS AB
We	EMD AN	PS-I LAB TC		RPS PJ	MP LAB MN
Th	EMD AN			CS AB	MP MN
Fr	EM AT	PS-I TC		CS LAB AB	V-IT Group 1 PJ
Sa	EM AT	PS-I TC		V-IT Group 2 AB	

Timetable generated: 10/5/2020

aSc Timetables

AB - Mr.AJAY BHARDWAJ
AN - Mr.ARUN NAYAK
AT - Mr.ANKUSH TANDON
MN - Mr.MANISH NAVLAKHA
PJ - Ms.POOJA JAIN
TC - Mr.TARUN CHEEPA

CS LAB - CONTROL SYSTEM LAB
CS - CONTROL SYSTEMS
EMD - ELECTRICAL MACHINE DESIGN
EM - ELECTRICAL MATERIAL
MP LAB - MICROPRESSOR LAB
MP - MICROPROSESSOR
PS-I LAB - POWER SYSTEM-I LAB
PS-I - POWER SYSTEM-I
RPS - RESTURCTURED POWER SYSTEM

Swami Keshvanand Institute of Technology, M&G, Jaipur

VII-EE-A

SKIT

DEPARTMENT OF ELECTRICAL ENGINEERING

	8:30 - 9:30	09:45 - 10:45	11:00 - 1:00	01:30 - 02:30	02:45 - 03:45
Mo	PQF AKS	ES LAB AV			
Tu	VII-SEMINAR Group 1 AT	ACS LAB AKS		PEC RS	
We	PQF AKS	VII-IT Group 1 SN		VII-SEMINAR Group 2 AB	
Th	PROJECT-1 TN	PROJECT-1 AV		PEC RS	
Fr	ACS LAB AKS	ES LAB AV		PEC RS	
Sa	VII-IT Group 2 DS	PQF AKS			

Timetable generated: 10/6/2020

aSc Timetables

AB - Mr.AJAY BHARDWAJ
AKS - Dr. AKASH SAXENA
AT - Mr.ANKUSH TANDON
AV - Mr.ANKIT VIJAY
DS - Mr.DEEPAK SAINI
RS - Mrs.RICHA SHARMA
SN - Mr.SARFARAZ NAWAZ
TN - Mr.TARUN NARUKA

ACS LAB - ADVANCE CONTROL SYSTEM LAB
ES LAB - EMBEDDED SYSTEM LAB
PEC - Principle of Electronic Communication
PQF - Power Quality and FACTS
PROJECT-1 - PROJECT-1
VII-IT - VII Sem INDUSTRIAL TRANING
VII-SEMINAR - VII-SEMINAR

SWAMI KESHVANAND INSTITUTE OF TECHNOLOGY MANAGEMENT & GRAMOTHAN

GATE Students List (2020-21)

S. No.	University RollNo.	Name of Student
1	19ESKEE001	AADESH GURJAR
2	19ESKEE002	AARSH RAGHAV
3	19ESKEE008	ADITYA SHARMA
4	19ESKEE009	ADITYA SINGHAL
5	19ESKEE010	AKASH SHARMA
6	19ESKEE011	AKSHAT JOSHI
7	19ESKEE012	AKSHITA SHARMA
8	19ESKEE024	ANSHUMAN
9	19ESKEE025	ANSHUMAN
10	19ESKEE077	ISHU SHARMA
11	19ESKEE078	JAIVARDHAN AGARWAL
12	19ESKEE079	JAYANT YADAV
13	19ESKEE080	JAYSHREE SHARMA
14	19ESKEE081	JUHI TAHILIANI
15	19ESKEE028	ANURAG SINGHAL
16	19ESKEE029	ANURAG YADAV
17	19ESKEE030	ANUSHKA PORWAL
18	19ESKEE039	ASTHA GUPTA
19	19ESKEE040	AYUSH MEENA
20	19ESKEE041	AYUSH SEN
21	19ESKEE048	CHINMAY
22	19ESKEE049	CHIRAG GOYAL
23	19ESKEE090	LAHAR
24	19ESKEE091	LAKSHYA BHATRA
25	19ESKEE092	LAKSHYA SHARMA
26	19ESKEE093	LOKENDRA KUMAR
27	19ESKEE094	MAHENDRA JANGID
28	19ESKEE095	MANISH KUMAR GANGEY
29	19ESKEE096	MANISH KUMAWAT
30	19ESKEE133	RAGHAV SAINI
31	19ESKEE134	RAHUL
32	19ESKEE135	RAHUL MEENA
33	19ESKEE136	RAHUL NAGARWAL
34	19ESKEE137	RAHUL TAK
35	19ESKEE138	RAJAT SHIVRAYAN
36	19ESKEE139	RAJNISH KUMAR
37	19ESKEE140	RAJU SHARMA
38	19ESKEE105	MUKUL JAYSWAL
39	19ESKEE106	NAISHA GUPTA
40	19ESKEE156	SANJAY SINGH
41	19ESKEE157	SARJANA BORANA
42	19ESKEE158	SARVESH KUMAR PAREEK
43	19ESKEE159	SAURABH KUMAWAT
44	19ESKEE160	SHIKHAR AUDICHYA
45	19ESKEE112	NISHI CHOUHAN

46	19ESKEE113	NITIN BAIRWA
47	19ESKEE114	NITISH SINGH
48	19ESKEE165	SHUBHAM BANSHIWAL
49	19ESKEE166	SHUBHAM SINGH
50	19ESKEE167	SHUBHNESH SHARMA
51	19ESKEE168	SMRITI SHARMA
52	19ESKEE169	SNEHA AGRAWAL
53	19ESKEE170	SONU CHOUDHARY
54	19ESKEE171	SOURABH MEENA
55	19ESKEE122	PRAKHAR NATANI
56	19ESKEE123	PRANAY PRABHAT
57	19ESKEE124	PRATEEK SHARMA
58	19ESKEE125	PRAVAR BHATT
59	19ESKEE126	PRAVEEN KUMAWAT
60	19ESKEE127	PRIYAG GOYAL
61	19ESKEE128	PRIYAM NEEMA
62	19ESKEE129	PULKIT PUNIA
63	19ESKEE130	PULKIT SONI
64	19ESKEE131	PUNEET SHRINGI
65	19ESKEE132	PUSHPENDRA JATAV

Swami Keshvanand Institute of Technology, Management & Gramothan
Ramnagaria Jagatpura, Jaipur
Department of Electrical Engineering

SKIT/DEE/2019/

Date: 22.07.2019

NOTICE

Department of Electrical Engineering is organizing GATE classes for all students of II, III & IV year. Interested students kindly give their names to Batch Counselor. A separate section will be made as GATE Section at the department level. The detailed time table has been placed on department notice board.

Dr. Akash Saxena
HOD, EE

Copy to:

- Head
- All Faculty
- Notice File
- Notice Board

GATE 2020 Syllabus for Electrical Engineering

Section 1:

Engineering Mathematics

Linear Algebra: Matrix Algebra, Systems of linear equations, Eigenvalues, Eigenvectors.
Calculus: Mean value theorems, Theorems of integral calculus, Evaluation of definite and improper integrals, Partial Derivatives, Maxima and minima, Multiple integrals, Fourier series, Vector identities, Directional derivatives, Line integral, Surface integral, Volume integral, Stokes's theorem, Gauss's theorem, Green's theorem.

Differential equations: First order equations (linear and nonlinear), Higher order linear differential equations with constant coefficients, Method of variation of parameters, Cauchy's equation, Euler's equation, Initial and boundary value problems, Partial Differential Equations, Method of separation of variables.

Complex variables: Analytic functions, Cauchy's integral theorem, Cauchy's integral formula, Taylor series, Laurent series, Residue theorem, Solution integrals.

Probability and Statistics: Sampling theorems, Conditional probability, Mean, Median, Mode, Standard Deviation, Random variables, Discrete and Continuous distributions, Poisson distribution, Normal distribution, Binomial distribution, Correlation analysis, Regression analysis.

Numerical Methods: Solutions of nonlinear algebraic equations, Single and Multi step methods for differential equations.

Transform Theory: Fourier Transform, Laplace Transform, z Transform.

Section 2:

Electric Circuits: Network graph, KCL, KVL, Node and Mesh analysis, Transient response of dc and ac networks, Sinusoidal steady state analysis, Resonance, Passive filters, Ideal

current and voltage sources, Thevenin's theorem, Norton's theorem, Superposition theorem, Maximum power transfer theorem, Two port networks, Three phase circuits, Power and power factor in ac circuits.

Section 3:

Electromagnetic Fields: Coulomb's Law, Electric Field Intensity, Electric Flux Density Gauss's Law, Divergence, Electric field and potential due to point, line, plane and spherical charge distributions, Effect of the dielectric medium, Capacitance of simple configurations, Biot-Savart's law, Ampere's law, Curl, Faraday's law, Lorentz force, Inductance, Magnetomotive force, Reluctance, Magnetic circuits, Self and Mutual inductance of simple configurations.

Section 4:

Signals and Systems: Representation of continuous and discrete-time signals, shifting and scaling properties, linear time-invariant and causal systems, Fourier series representation of continuous and discrete-time periodic signals, sampling theorem, Applications of Fourier Transform for continuous and discrete-time signals, Laplace Transform and Z transform.

Section 5

Electrical Machines:

Single phase transformer: equivalent circuit, phasor diagram, open circuit and short circuit tests, regulation and efficiency Three-phase transformers: connections, vector groups, parallel operation; Auto-transformer, Electromechanical energy conversion principles; DC machines: separately excited, series and shunt, motoring and generating mode of operation and their characteristics, speed control of dc motors; Three-phase induction machines: principle of operation, types, performance, torque-speed characteristics, no-load and blocked-rotor tests, equivalent circuit, starting and speed control; Operating principle of single-phase induction motors; Synchronous machines: cylindrical and salient pole machines, performance and characteristics, regulation and parallel operation of generators, starting of synchronous motors; Types of losses and efficiency calculations of electric machines

Section 6:

Power Systems: Basic concepts of electrical power generation, ac and dc transmission concepts, Models and performance of transmission lines and cables, Series and shunt

compensation, Electric field distribution and insulators, Distribution systems, Per-unit quantities, Bus admittance matrix, Gauss-Seidel and Newton-Raphson load flow methods, Voltage and Frequency Control, Power factor correction, Symmetrical components, Symmetrical and unsymmetrical faut analysis, Principles of overcurrent, differential, directional and distance protection; Circuit breakers, System stability concepts, Equal area criterion, Economic Load Dispatch (with and without considering transmission losses).

Section 7:

Control Systems: Mathematical modelling and representation of systems, Feedback principle, transfer function, Block diagrams and Signal flow graphs, Transient and Steady-state analysis of linear time invariant systems, Stability analysis using Routh Hurwitz and Nyquist criteria, Bode plots, Root loci, Lag, Lead and Lead-Lag compensators; P, Pl and PID controllers; State-space model, Solution of state equations of LTI systems, R.M.S. value, average value calculation for any general periodic waveform.

Section 8:

Electrical and Electronic Measurements: Bridges and Potentiometers, Measurement of voltage, current, power, energy and power factor; Instrument transformers, Digital voltmeters and multimeters, Phase, Time and Frequency measurement; Oscilloscopes, Error analysis.

Section 9:

Analog and Digital Electronics: Simple diode circuits: clipping, clamping, rectifiers Amplifiers: biasing, equivalent circuit and frequency response; oscillators and feedback amplifiers; operational amplifiers: characteristics and applications; single-stage active filters, Sallen Key. Butterworth, VCOs and timers, combinatorial and sequential logic circuits, multiplexers, demultiplexers, Schmitt triggers, sample and hold circuits, A/D and D/A converters.

Section 10:

Power Electronics Static V characteristics and firing/gating circuits for Thyristor, MOSFET, IGBT; DC to DC conversion: Buck, Boost and Buck-Boost Converters; Single and three-phase configuration of uncontrolled rectifiers; Voltage and Current commutated Thyristor based converters; Bidirectional ac to dc voltage source converters; Magnitude and Phase of line current harmonics for uncontrolled and thyristor-based converters; Power factor

and Distortion Factor of ac to dc converters; Single-phase and three-phase voltage and current source inverters, sinusoidal pulse width modulation.

Swami Keshvanand Institute of Technology, M&G, Jaipur

2019-20 (odd sem)

DEPARTMENT OF ELECTRICAL ENGINEERING

III-EE-A

SKIT

	08:00 - 09:00	09:00 - 10:00	10:00 - 11:00	11:00 - 12:00	11:00 - 11:30	11:30 - 12:30	12:30 - 01:30	01:30 - 02:30	02:30 - 03:30
Mo	L1 -1F:LAB1 M/c LAB AN / SP L3 5F:LAB5 CKT LAB BL / AV		MEFA 6F:L8 SM			ITS-III 6F:L8 AN / RS		AE 6F:L6 MC	
Tu	AEM-1 6F:L5 CPJ	EMFT 6F:L5 AD	AE 6F:L5 MC			CA- I 6F:L5 MDI	L1 5F:LAB5 CKT LAB BL / JSG L2 -1F:LAB1 M/c LAB AN / SP L3 6F:LAB12 AE LAB VSH / PP		
We	L1 6F:LAB12 AE LAB PP / VSH L2 5F:LAB5 CKT LAB JSG / BL L3 -1F:LAB1 M/c LAB DS / SP		AEM-1 Group 1 6F:L7 CPJ			EMFT 6F:L7 AD	AE 6F:L7 MC	AEM-1 Group 2 7F:L12 CPJ	
Th	L1 -1F:LAB1 M/c LAB AN / BL L2 5F:LAB6 CKT LAB MDI / SKH		EM-1 6F:L7 VM			CA- I 6F:L6 MDI	PGP 6F:L6 GRG	SS SS Lab NP	
Fr	L2 -1F:LAB1 M/c LAB AN / SP L3 5F:LAB6 CKT LAB AD / SKH		AEM-1 6F:L5 CPJ			MEFA 6F:L8 SM	CA- I 6F:L5 MDI	EM-1 6F:L5 VM	
Sa	AEM-1 6F:L5 CPJ	EM-1 6F:L5 VM	L1 5F:LAB6 CKT LAB MDI / SKH L2 6F:LAB12 AE LAB VSH / PP L3 -1F:LAB1 M/c LAB DS / SP				SS SS Lab NP	PGP 7F:L10 GRG	
Su									

Timetable generated: 10/1/2019

aSc Timetables

AD - Mr.AKASH DEO
AN - Mr.ARUN NAYAK
AV - Mr.ANKIT VIJAY
BL - Mr.BANSI LAL
CPJ - Mr.C.P.Jain
DS - Mr.DEEPAK SAINI
GRG - Mr. GARVIT GUPTA

MDI - MD.IMRAN
NP - Dr. NEHA PUROHIT
PP - Mr. PREM PRAKASH
RS - Mrs.RESHMA SHARMA
SKH - Mr. SALMAN KHAN
SM - Dr. SANJEEV MATHUR
SP - Mr. SATYAM PANDYA

Swami Keshvanand Institute of Technology, M&G, Jaipur

V-EE-A

SKIT

DEPARTMENT OF ELECTRICAL ENGINEERING

	08:00 - 09:00	09:00 - 10:00	10:00 - 11:00	11:00 - 12:00	11:00 - 11:30	11:30 - 12:30	12:30 - 01:30	01:30 - 02:30	02:30 - 03:30
Mo	MS 6F:L5 BB	PS-I 6F:L5 AB					L1 6F:LAB10 SP LAB AB / SKH L2 6F:LAB11 CS LAB TN / SS L3 7F:LAB14 PS-I LAB KJ / KS		
Tu	CS 6F:L8 TN	MCA 6F:L8 RM				CRT 6F:L6 RP	CRT 6F:L6 TN	PS-I 6F:L5 AB	
We	L1 6F:LAB11 CS LAB TN / SS L2 7F:LAB13 MCA LAB RM / HT L3 6F:LAB10 SP LAB AB / SKH		EMD 6F:L5 AN			CS 6F:L6 TN	RPS 6F:L6 KJ		
Th	TS-V 6F:L8 DS / GRG		RPS 7F:L11 KJ			CS 6F:L5 TN	MCA 6F:L5 RM	EMD 6F:L5 AN	
Fr	PS-I 7F:L10 AB	MCA 7F:L10 RM	RPS 7F:L10 KJ				L1 7F:LAB14 PS-I LAB KJ / KS L2 6F:LAB10 SP LAB AB / PP L3 7F:LAB13 MCA LAB HT / MN		
Sa	MS 6F:L6 BB	CRT 5F:L3 AN	CRT 5F:L3 AN			EMD 6F:L6 AN	L1 7F:LAB13 MCA LAB RM / HT L2 7F:LAB14 PS-I LAB KJ / KS L3 6F:LAB11 CS LAB TN / SS		
Su									

Timetable generated: 10/2/2019

aSc Timetables

AB - Mr.AJAY BHARDWAJ
AN - Mr.ARUN NAYAK
BB - Ms.BAIBHAV BISHAL
DS - Mr.DEEPAK SAINI
GRG - Mr.GARVIT GUPTA
HT - Ms. HANSA TANWAR
KJ - Mr. KAVITA JAIN

MN - Mr.MANISH NAVLAKHA
PP - Mr. PREM PRAKASH
RM - Mrs. RAMMURTI MEENA
RP - Mr RAMESH PRAKASH
SKH - Mr. SALMAN KHAN
SS - Mr.SATYAVEER SINGH
TN - Mr. TARUN NARUKA

Swami Keshvanand Institute of Technology, M&G, Jaipur

VII-EE-A

DEPARTMENT OF ELECTRICAL ENGINEERING

SKIT असतो मा सद्गमय

	08:00 - 09:00	09:00 - 10:00	10:00 - 11:00	11:00 - 12:00	11:00 - 11:30	11:30 - 12:30	12:30 - 01:30	01:30 - 02:30	02:30 - 03:30
Mo	PSP 7F:L9 RP	PSE 7F:L9 AKS	AIT 7F:L9 GK			PROJECT-1 L1,L2,L3 MR / GK / YS / TN / AB JR / AD / SJ	PROJECT-1 L1,L2,L3 BM / MR / JR / AD	PSA 7F:L9 DC	
Tu	L1 5F:LAB7 PSMS LAB DC / VKD L2 7F:LAB 15 PSP LAB RP / RS L3 6F:EE:LAB9 PTS LAB PJ		IEM 7F:L9 MLB			EOPS 7F:L9 SJ			
We	PSE 7F:L9 AKS	PSP 7F:L9 RP	AIT 7F:L9 GK			NCES 7F:L9 TC	PSA 7F:L9 DC	EOPS 7F:L9 SJ	
Th	L1 7F:LAB 15 PSP LAB RP / RS L2 6F:EE:LAB9 PTS LAB PJ L3 5F:LAB7 PSMS LAB DC / VKD		PSP 7F:L9 RP			EOPS 7F:L9 SJ			
Fr	PSE 7F:L9 AKS	PSA 7F:L9 DC	NCES 7F:L9 TC			IEM 7F:L9 MLB	L1 7F:L9 PTS LAB SN L2 5F:LAB7 PSMS LAB DC / VKD L3 7F:LAB 15 PSP LAB RP / RS		
Sa	PSE 7F:L9 AKS	PSA 7F:L9 DC	AIT 7F:L9 GK			NCES 7F:L9 TC			
Su									

Timetable generated: 10/2/2019

aSc Timetables

AB - Mr.AJAY BHARDWAJ
AD - Mr.AKASH DEO
AKS - Dr. AKASH SAXENA
BM - Mr.BHARAT MODI
DC - Mr.DHANRAJ CHITARA
GK - Mr.GAURAV KANSAL
JR - Mr. JITENDRA RAHUL

PJ - Ms.POOJA JAIN
RP - Mr RAMESH PRAKASH
RS - Mrs.RESHMA SHARMA
SJ - Mrs. SMRITI JAIN
SN - Mr.SARFARAZ NAWAZ
TC - Mr.TARUN CHEEPA
TN - Mr. TARUN NARUKA

Swami Keshvanand Institute of Technology, M&G, Jaipur

IV-EE-A

2019-20 (Even sem)

DEPARTMENT OF ELECTRICAL ENGINEERING

SKIT असतो मा सद्गमय

	1 08:00 - 09:00	2 09:00 - 10:00	3 10:00 - 11:00	4 11:00 - 12:00	5 11:00 - 11:30	6 11:30 - 12:30	7 12:30 - 01:30	8 01:30 - 02:30	9 02:30 - 03:30
Mo	SS 6F:L7 MDI	TC 6F:L7 NP	EMI 6F:L7 TN			MNPTEL 6F:L8 VM	-1F:LAB1 EM/C LAB-II L1 VM / SP 6F:LAB9 PE LAB L2 AV / PP 5F:LAB5 EM LAB L3 TN / HT		
Tu	DE 6F:L7 DA	BIO 6F:L8 SV	6F:LAB10 EM/C LAB-II L1 VM / SP 5F:LAB5 EM LAB L2 TN / RS 5F:LAB6 PE LAB L3 AV / PP				EM/C-II 5F:L3 VM	PE 5F:L3 AV	
We	EMI 6F:L6 TN	PE 6F:L6 AV	EM/C-II 6F:L6 VM			SS 5F:L3 MDI	3F:LAB4 DE LAB L1 DA / HT 5F:LAB6 PE LAB L2 AV / PP 6F:LAB10 EM/C LAB-II L3 VM / SP		
Th	PENPTEL 6F:L8 AV	DE 6F:L7 DA	TC 6F:L7 NP				6F:LAB9 PE LAB L1 AV / PP 6F:LAB10 EM/C LAB-II L2 VM / SP 3F:LAB4 DE LAB L3 DA / HT		
Fr	PE 6F:L6 AV	DE 6F:L6 DA	5F:LAB5 EM LAB L1 TN / RS -1F:LAB1 EM/C LAB-II L2 VM / SP 6F:LAB9 PE LAB L3 AV / PP				BIO 5F:L3 SV	SS 5F:L3 MDI	
Sa	EMI 5F:L3 TN	EM/C-II 5F:L3 VM	SSNPTEL 6F:L8 MDI			DENPTEL 6F:L8 DA	5F:LAB6 PE LAB L1 AV / SK 3F:LAB4 DE LAB L2 DA / HT -1F:LAB1 EM/C LAB-II L3 VM / SP		

Timetable generated: 1/24/2020

aSc Timetables

AV - Mr.ANKIT VIJAY
DA - Mrs.DEEPTI ARELA
HT - Ms.Hansa Tanwar
MDI - MD IMRAN
NP - Dr. NEHA PUROHIT
PP - Mr.Prem Prakash
RS - RESHMA SHARMA
SK - Mr.Salman Khan
SP - Mr.Satyam Pandya
SV - Sangeeta Vyas
TN - Mr.TARUN NARUKA
VM - Mr.VIKAS MAHALA

Swami Keshvanand Institute of Technology, M&G, Jaipur

VI-EE-B

DEPARTMENT OF ELECTRICAL ENGINEERING

SKIT

	1 08:00 - 09:00	2 09:00 - 10:00	3 10:00 - 11:00	4 11:00 - 12:00	5 11:00 - 11:30	6 11:30 - 12:30	7 12:30 - 01:30	8 01:30 - 02:30	9 02:30 - 03:30
Mo	6F:LAB10 MS LAB L1 DS / Mr.X 6F:LAB11 PS-II LAB L2 BB / SS 5F:LAB6 ED LAB L3 JSG / SK		PS-II 6F:L6 BB			EECA 6F:L6 DS	PSP 6F:L6 GK	PS PLAN. 6F:L6 GG	
Tu	6F:LAB11 PS-II LAB L1 BB / SS 7F:LAB15 ED LAB L2 BM / MR 6F:LAB10 MS LAB L3 DS / Mr.X		PS-II 6F:L5 BB			CRT 6F:L5 DA	CRT 6F:L5 DA	EECA 6F:L5 DS	
We	7F:LAB14 PSP LAB L1 GK / BL 5F:LAB6 ED LAB L2 BM / SK 6F:LAB11 PS-II LAB L3 BB / SS		EECA 6F:L5 DS			CA 7F:L9 AD	ED 7F:L9 JSG		
Th	PS-II 6F:L6 BB	ED 6F:L6 JSG	6F:LAB11 PS-II LAB L1 BB / SS 6F:LAB10 MS LAB L2 PJ / Mr.X 7F:LAB15 ED LAB L3 JSG / KS				CA 6F:L6 AD		
Fr	7F:LAB15 ED LAB L1 JSG / MR 7F:LAB14 PSP LAB L2 GK / BL 6F:LAB11 PS-II LAB L3 BB / SS		PSP 6F:L5 GK			PS PLAN. 6F:L5 GG	ED 6F:L5 JSG	EECA 6F:L5 DS	
Sa	5F:LAB6 ED LAB L1 JSG / SK 6F:LAB11 PS-II LAB L2 BB / SS 7F:LAB14 PSP LAB L3 GK / BL		PSP 6F:L5 GK			CRT 6F:L6 KJ	CRT 6F:L6 DS	PS PLAN. 6F:L6 GG	

Timetable generated: 1/24/2020

aSc Timetables

AD - Mr.AKASH DEO
BB - Ms.BAIBHAV BISHAL
BL - Mr.Bansi Lal
BM - Mr.BHARAT MODI
DA - Mrs.DEEPTI ARELA
DS - Mr.DEEPAK SAINI

JSG - Mr.JITENDRA SINGH
KJ - Ms.KAVITA JAIN
KS - Mr.Kulwant Singh
MR - Mr.Mahesh Rathodiya
Mr.X - Mr.X
PJ - Ms.POOJA JAIN

Swami Keshvanand Institute of Technology, M&G, Jaipur

VIII-EE-A

DEPARTMENT OF ELECTRICAL ENGINEERING

SKIT असतो मा सद्गमय

	1 08:00 - 09:00	2 09:00 - 10:00	3 10:00 - 11:00	4 11:00 - 12:00	5 11:00 - 11:30	6 11:30 - 12:30	7 12:30 - 01:30	8 01:30 - 02:30	9 02:30 - 03:30
Mo	EHV AC/DC 7F:L9 MN	PPS 7F:L9 DC	HVE LAB L1 6F:LAB10 SN / Mr.X			EDTC 7F:L9 YS	UEP 7F:L9 JSG		
Tu	EDTC LAB L3 5F:LAB7 YS / VD	EHV AC/DC 7F:L9 MN	UEP 7F:L9 JSG			EDTC L2, L3 5F:T2 YS	5F:LAB7 CBPS LAB L1 AKS / VD 7F:LAB15 EDTC LAB L2 YS / KS 7F:LAB16 PROJECT-II L3 SJ / TN / AD / MR		
We	UEP 7F:L9 JSG	PPS 7F:L9 DC	EDTC 7F:L9 YS	EDTC LAB L1 6F:LAB11 YS / RS HVE LAB L3 6F:LAB10 SN / Mr.X			HVE LAB L2 5F:LAB7 AT / SK		
Th	EDTC 7F:L9 YS	EHV AC/DC 7F:L9 MN	7F:LAB16 PROJECT-II L1 GK / VM / YS / MR 6F:LAB12 PROJECT-II L2 AB / AD / PP HVE LAB L3 7F:LAB13 SN / HT				PPS 7F:L9 DC		
Fr	EDTC LAB L2 5F:LAB7 YS / RS	HVE LAB L1 7F:LAB13 SN / RS 5F:LAB7 CBPS LAB L2 SJ / VD	7F:LAB15 EDTC LAB L3 YS / KS				SEMINAR 6F:L8 DC / YS / AD / SS		
Sa	7F:LAB15 EDTC LAB L1 YS / KS HVE LAB L2 7F:LAB13 SN / HT 5F:LAB7 CBPS LAB L3 SJ / VD		EDTC L1, L2 5F:T2 YS	PPS 7F:L9 DC			EHV AC/DC 7F:L9 MN		

Timetable generated: 1/24/2020

aSc Timetables

AB - Mr.AJAY BHARADWAJ
AD - Mr.AKASH DEO
AKS - DR. AKASH SAXENA
AT - Mr.ANKUSH TANDON
DC - Mr.DHANRAJ CHITARA
GK - Mr.GAURAV KANSAL

Mr.X - Mr.X
PP - Mr.Prem Prakash
RS - RESHMA SHARMA
SJ - Mrs. SMRITI JAIN
SK - Mr.Salman Khan
SN - DR.SARFARAZ NAWAZ

SWAMI KESHVANAND INSTITUTE OF TECHNOLOGY MANAGEMENT & GRAMOTHAN

GATE Section Students List (2019-20)

S. No.	University RollNo.	Name of Student
1	18ESKEE001	Aarambh Jangir
2	18ESKEE002	Abhishek Kumar Sarang
3	18ESKEE003	Aditya Gaur
4	18ESKEE014	Animesh Gaur
5	18ESKEE015	Ankit Jonwal
6	18ESKEE016	Anshul Maurya
7	18ESKEE017	Anuj Saini
8	18ESKEE022	Ashveen Dasaya
9	18ESKEE023	Aviral Jain
10	18ESKEE043	Himanshu Goyal
11	18ESKEE044	Himanshu Pareek
12	18ESKEE045	Himanshu Sharma
13	18ESKEE046	Hrithik Khangarot
14	18ESKEE047	Ipsit Samariya
15	19ESKEE202	Deepanshu
16	19ESKEE203	Mahesh Yadav
17	19ESKEE204	Rajesh Kumar
18	19ESKEE205	Tejas Sachdev
19	18ESKEE064	Lakshit Sharma
20	18ESKEE065	Lakshita Shringi
21	18ESKEE066	Lalit Meena
22	18ESKEE067	Lokesh Kasana
23	18ESKEE068	Madhav Sharma
24	18ESKEE069	Manan Maini
25	18ESKEE070	Mansi Kumawat
26	18ESKEE071	Mayank Khandelwal
27	18ESKEE072	Megha Sharma
28	18ESKEE073	Milind Jalwania
29	18ESKEE074	Mohammed Moonis
30	18ESKEE075	Mudit Surana
31	18ESKEE070	Mansi Kumawat
32	18ESKEE071	Mayank Khandelwal
33	18ESKEE072	Megha Sharma
34	18ESKEE073	Milind Jalwania
35	18ESKEE074	Mohammed Moonis
36	18ESKEE075	Mudit Surana
37	18ESKEE076	Nakul Singh Jadon
38	18ESKEE077	Nandnandan Garg
39	18ESKEE078	Naveen Kumar Verma
40	18ESKEE079	Neha Singh
41	18ESKEE080	Nikhil Singh
42	18ESKEE081	Nishant Singh
43	18ESKEE082	Pankaj Kumar
44	18ESKEE083	Pankaj Nagar
45	18ESKEE084	Paras Jatav
46	18ESKEE085	Poorvaja Verma
47	18ESKEE086	Pradhuman Kumar Chandel

48	18ESKEE087	Prashu Jain
49	18ESKEE088	Prince Meena
50	18ESKEE706	Ankush Joshi
51	18ESKEE707	Ankush Meena
52	18ESKEE708	Anveshika Singh
53	18ESKEE709	Arpit Gangwal
54	18ESKEE711	Ashish Latiyal
55	18ESKEE712	Bhavesh Sharma
56	18ESKEE713	Bhoomika Dubey
57	18ESKEE714	Chetan Jangid
58	18ESKEE715	Chetan Prajapat
59	18ESKEE716	Chitranjan Arya
60	18ESKEE717	Deepak Kumar Mahar
61	18ESKEE728	Manali Sharma
62	18ESKEE729	Manish Poswal
63	18ESKEE730	Mayank Khandelwal
64	18ESKEE731	Mayank Saxena
65	18ESKEE733	Mohit
66	18ESKEE734	Mohit Agrawal
67	18ESKEE735	Mohit Vishnani
68	18ESKEE736	Monika Jareda
69	18ESKEE738	Nidhi Mahawar
70	18ESKEE739	Nikhil Chopra
71	18ESKEE740	Nikita Meena
72	18ESKEE741	Paras Sharma

Swami Keshvanand Institute of Technology, Management & Gramothan
Ramnagaria Jagatpura, Jaipur
Department of Electrical Engineering

SKIT/DEE/2018/

Date: 13.08.2018

NOTICE

Department of Electrical Engineering is organizing GATE classes for all students of II, III & IV year. Interested students kindly give their names to Batch Counselor. A separate section will be made as GATE Section at the department level. The detailed time table has been placed on department notice board.

Dr. Akash Saxena
HOD EE

Copy to:

- Head
- All Faculty
- Notice File
- Notice Board

GATE 2019 ELECTRICAL ENGINEERING SYLLABUS:

ENGINEERING MATHEMATICS

Linear Algebra: Matrix Algebra, Systems of linear equations, Eigenvalues, Eigenvectors. Calculus: Mean value theorems, Theorems of integral calculus, Evaluation of definite and improper integrals, Partial Derivatives, Maxima and minima, Multiple integrals, Fourier series, Vector identities, Directional derivatives, Line integral, Surface integral, Volume integral, Stokes's theorem, Gauss's theorem, Green's theorem. Differential equations: First order equations (linear and nonlinear), Higher order linear differential equations with constant coefficients, Method of variation of parameters, Cauchy's equation, Euler's equation, Initial and boundary value problems, Partial Differential Equations, Method of separation of variables. Complex variables: Analytic functions, Cauchy's integral theorem, Cauchy's integral formula, Taylor series, Laurent series, Residue theorem, Solution integrals. Probability and StatisticS: Sampling theorems, Conditional probability, Mean, Median, Mode, Standard Deviation, Random variables, Discrete and Continuous distributions, Poisson distribution, Normal distribution, Binomial distribution, Correlation analysis, Regression analysis. Numerical Methods: Solutions of nonlinear algebraic equations, Single and Multi-step methods for differential equations. Transform Theory: Fourier Transform, Laplace Transform, z-Transform.

Section 2:

Electric Circuits Network graph, KCL, KVL, Node and Mesh analysis, Transient response of dc and ac networks, Sinusoidal steady-state analysis, Resonance, Passive filters, Ideal current and voltage sources, Thevenin's theorem, Norton's theorem, Superposition theorem, Maximum power transfer theorem, Two-port networks, Three phase circuits, Power and power factor in ac circuits.

Section 3:

Electromagnetic Fields Coulomb's Law, Electric Field Intensity, Electric Flux Density, Gauss's Law, Divergence, Electric field and potential due to point, line, plane and spherical charge distributions, Effect of dielectric medium, Capacitance of simple configurations, Biot-Savart's law, Ampere's law, Curl, Faraday's law, Lorentz force, Inductance, Magnetomotive force, Reluctance, Magnetic circuits,Self and Mutual inductance of simple configurations.

Section 4:

Signals and Systems Representation of continuous and discrete-time signals, Shifting and scaling operations, Linear Time Invariant and Causal systems, Fourier series representation of continuous periodic signals, Sampling theorem, Applications of Fourier Transform, Laplace Transform and z-Transform.

Section 5:

Electrical Machines Single phase transformer: equivalent circuit, phasor diagram, open circuit and short circuit tests, regulation and efficiency; Three phase transformers: connections, parallel operation; Auto-transformer, Electromechanical energy conversion principles, DC machines: separately excited, series and shunt, motoring and generating mode of operation and their characteristics, starting and speed control of de motors; Three phase induction motors: principle of operation, types, performance, torque-speed characteristics, no-load and blocked rotor tests, equivalent circuit, starting and speed control; Operating principle of single phase induction motors; Synchronous machines: cylindrical and salient pole machines, performance, regulation and parallel operation of generators, starting of synchronous motor, characteristics; Types of losses and efficiency calculations of electric machines.

Section 6:

Power Systems Power generation concepts, ac and dc transmission concepts, Models and performance of transmission lines and cables, Series and shunt compensation, Electric field distribution and insulators, Distribution systems, Per-unit quantities, Bus admittance matrix, Gauss-Seidel and Newton-Raphson load flow methods, Voltage and Frequency control, Power factor correction, Symmetrical components, Symmetrical and unsymmetrical fault analysis, Principles of over-current, differential and distance protection; Circuit breakers, System stability concepts, Equal area criterion.

Section 7:

Control Systems Mathematical modeling and representation of systems, Feedback principle, transfer function, Block diagrams and Signal flow graphs, Transient and Steady-state analysis of linear time invariant systems, Routh Hurwitz and Nyquist criteria, Bode plots, Root loci, Stability analysis, Lag, Lead and Lead-Lag compensators; P, PI and PID controllers, State space model, State transition matrix. Section 8: Electrical and Electronic Measurements Bridges and Potentiometers, Measurement of voltage, current, power, energy and power

factor; Instrument transformers, Digital voltmeters and multimeters, Phase, Time and Frequency measurement; Oscilloscopes, Error analysis. Section 9: Analog and Digital Electronics Characteristics of diodes, BJT, MOSFET; Simple diode circuits: clipping, clamping, rectifiers; Amplifiers: Biasing, Equivalent circuit and Frequency response; Oscillators and Feedback amplifiers; Operational amplifiers: Characteristics and applications; Simple active filters, VCOs and Timers, Combinational and Sequential logic circuits, Multiplexer, Demultiplexer, Schmitt trigger, Sample and hold circuits, A/D and D/A converters, 8085Microprocessor. Architecture, Programming and Interfacing.

Section 10:

Power Electronics Characteristics of semiconductor power devices: Diode, Thyristor, Triac, GTO, MOSFET, IGBT; DC to DC conversion: Buck, Boost and Buck-Boost converters; Single and three phase configuration of uncontrolled rectifiers, Line commutated thyristor-based converters, Bidirectional ac to de voltage source converters, Issues of line current harmonics, Power factor, Distortion factor of ac to dc converters, Single phase and three phase inverters, Sinusoidal pulse width modulation

Swami Keshvanand Institute of Technology, M&G, Jaipur

III-EE-A

DEPARTMENT OF ELECTRICAL ENGINEERING

2018-19 (odd sem)

SKIT असतो मा सद्गमय

	08:00 - 09:00	09:00 - 10:00	10:00 - 11:00	11:00 - 12:00	11:00 - 11:30	11:30 - 12:30	12:30 - 01:30	01:30 - 02:30	02:30 - 03:30
Mo	L1 -1F:LAB1 M/c LAB AN / SP L3 5F:LAB5 CKT LAB MN / BL		PGP 5F:L3 GRG			TS-III 6F:L8 YS	AE 5F:L3 NG	MEFA 5F:L3 SM	
Tu	EMFT 7F:L9 AD	L1 5F:LAB5 CKT LAB RM / BL L2 -1F:LAB1 M/c LAB AN / SP L3 6F:LAB12 AE LAB NG / PP				CA-1 5F:L3 AV	AEM-1 5F:L3 AMS		
We	L1 6F:LAB12 AE LAB NG / PP L2 6F:LAB11 CKT LAB AB / SS L3 -1F:LAB1 M/c LAB DS / SP		EM-1 7F:L9 AN			PGP 5F:L3 GRG	AEM-1 5F:L3 AMS		
Th	L1 -1F:LAB1 M/c LAB AN / SP L2 5F:LAB5 CKT LAB RM / BL		AEM-1 5F:L3 AMS			SS SS Lab NS	CA-1 5F:L3 AV	AE 5F:L3 NG	
Fr	L2 -1F:LAB1 M/c LAB AN / SP L3 6F:LAB11 CKT LAB AB / SS		SS SS Lab NS			EM-1 5F:L3 AN	TS-III 6F:L8 YS	AE 5F:L3 NG	
Sa	EMFT 5F:L3 AD	L1 6F:LAB11 CKT LAB AB / SS L2 6F:LAB12 AE LAB NG / PP L3 -1F:LAB1 M/c LAB DS / SP				EM-1 6F:L5 AN	CA-1 6F:L5 AV	MEFA 6F:L5 SM	

Timetable generated: 7/30/2018

aSc Timetables

AB - Mr.AJAY BHARDWAJ
AD - Mr.AKASH DEO
AMS - Mr.AMBER SHRIVASTAV
AN - Mr.ARUN NAYAK
AV - Mr.ANKIT VIJAY
BL - Mr.BANSI LAL
DS - Mr.DEEPAK SAINI
GRG - Mr.GARVIT GUPTA
MN - Mr.MANISH NAVLAKHA
NG - Mr.NIHIT GIRI
NS - Dr. NIDHI SHARMA
PP - Mr. PREM PRAKASH
RM - Mrs.RAMMURTI MEENA
SM - Dr. SANJEEV MATHUR
SP - Mr.SATYAM PANDYA
SS - Mr.SATYAVEER SINGH
YS - Md.YUSUF SHAREEF

Swami Keshvanand Institute of Technology, M&G, Jaipur

V-EE-A

SKIT

DEPARTMENT OF ELECTRICAL ENGINEERING

	1 08:00 - 09:00	2 09:00 - 10:00	3 10:00 - 11:00	4 11:00 - 12:00	5 11:00 - 11:30	6 11:30 - 12:30	7 12:30 - 01:30	8 01:30 - 02:30	9 02:30 - 03:30
Mo	CS 6F:L5 TN	TDEP 6F:L5 MDI	OT 6F:L5 VS			L1 5F:LAB6 SP LAB TN L2 6F:LAB10 DBMS LAB SK L3 6F:LAB9 PE LAB JR		PEDM 6F:L7 ND	
Tu	PEDM 7F:L10 ND	CRT 7F:L10 VKS	CRT 7F:L10 VM			DBMS 6F:L5 SK	PE 6F:L5 JR	MCA 6F:L5 SL	
We	MCA 6F:L5 SL	PE 6F:L5 JR	TDEP 6F:L5 MDI			L1 6F:LAB10 DBMS LAB SK L2 7F:LAB13 MCA LAB SL L3 5F:LAB6 SP LAB TN			
Th	PE 7F:L10 JR	CRT 7F:L10 VKS				OT 6F:L5 VS	DBMS 6F:L5 SK	CS 6F:L5 TN	
Fr	TDEP 6F:L5 MDI	MCA 6F:L5 SL				DBMS 6F:L5 SK	L1 6F:LAB9 PE LAB JR L2 5F:LAB6 SP LAB TN L3 7F:LAB13 MCA LAB SL		
Sa	OT 7F:L10 VS	CRT 7F:L10 GRG	CRT 7F:L10 VSH			CS 6F:L7 TN	L1 7F:LAB13 MCA LAB SL L2 6F:LAB9 PE LAB JR L3 6F:LAB10 DBMS LAB SK		

Timetable generated: 7/23/2018

aSc Timetables

GRG - Mr.GARVIT GUPTA
JR - Mr.JINENDRA RAHUL
MDI - MD.IMRAN
ND - Mr. NEERAJ DHAWAN
SK - Mr.Sushant Kumar
SL - Mr.SUNIL LAKHAWAT
TN - Mr.TARUN NARUKA
VKS - Mr.VIKRAM SINGH
VM - Mr.VIKAS MAHALA
VS - Dr.VIJAY SINGHAL
VSH - Mr.VIVEK SHARMA

Swami Keshvanand Institute of Technology, M&G, Jaipur

VII-EE-A

DEPARTMENT OF ELECTRICAL ENGINEERING

SKIT

	1 08:00 - 09:00	2 09:00 - 10:00	3 10:00 - 11:00	4 11:00 - 12:00	5 11:00 - 11:30	6 11:30 - 12:30	7 12:30 - 01:30	8 01:30 - 02:30	9 02:30 - 03:30
Mo	PSE 7F:L11 AKS	PSA 7F:L11 GK	EOPS 7F:L11 YS			PROJECT-1 Group 2 7F:LAB16 AG / AV			
Tu	L1 5F:LAB7 PSMS LAB BB L2 7F:LAB14 PSP LAB RP L3 6F:L8 PTS LAB DA / SN		EOPS 7F:L11 YS	PSP 7F:L11 RP					
We	PSE 7F:L11 AKS	PSP 7F:L11 RP	PSA 7F:L11 GK			PROJECT-1 Group 1 7F:LAB16 AG / AV			
Th	AIT 7F:L11 DS	EOPS 7F:L11 YS	L1 7F:LAB14 PSP LAB RP L2 6F:L8 PTS LAB DA / AG L3 5F:LAB7 PSMS LAB BB						
Fr	NCES 7F:L11 TC	AIT 7F:L11 DS	L1 6F:L8 PTS LAB DA / MDI L2 5F:LAB7 PSMS LAB BB L3 7F:LAB14 PSP LAB TC						
Sa	PSE 7F:L11 AKS	PSA 7F:L11 GK	IEM 7F:L11 MLB	NCES 7F:L11 TC					

Timetable generated: 7/21/2018

aSc Timetables

AG - Mr.ABHISHEK GUPTA
AKS - AKASH SAXENA
AV - Mr.ANKIT VIJAY
BB - Ms.BAIBHAV BISHAL
DA - Mrs.DEEPTI ARELA
DS - Mr.DEEPAK SAINI
GK - Mr.GAURAV KANSAL
MDI - MD.IMRAN
MLB - Mr.MOHAN LAL BHARGAVA
MYSA - Md.YUSUF SHAREEF
RP - Mr RAMESH PRAKASH
SN - Mr.SARFARAZ NAWAZ
TC - Mr.TARUN CHEEPA

Swami Keshvanand Institute of Technology, M&G, Jaipur

2018-19 (Even Sem)

DEPARTMENT OF ELECTRICAL ENGINEERING

IV-EE-A

SKIT असतो मा सद्गमय

	1 08:00 - 09:00	2 09:00 - 10:00	3 10:00 - 11:00	4 11:00 - 12:00	5 11:00 - 11:30	6 11:30 - 12:30	7 12:30 - 01:30	8 01:30 - 02:30	9 02:30 - 03:30
Mo	-1F:LAB1 EM/C LAB-II L1 BM / SP 6F:LAB12 PE LAB L2 AB / HT 5F:LAB5 EM LAB L3 AV / BL		5F:L3 SS MDI			5F:L3 EM/C-II BM	5F:L3 EMI AV	6F:L8 BIO SV	
Tu	7F:L9 EM/C-II BM	7F:L9 DE YS	7F:L9 PE AB			6F:LAB12 PE LAB L1 AB / PP 3F:LAB4 DE LAB L2 KJ / HT -1F:LAB1 EM/C LAB-II L3 BM / SP			
We	-1F:LAB1 EM/C LAB-II L1 BM / BL 6F:LAB12 PE LAB L2 AB / PP 3F:LAB4 DE LAB L3 YS / HT		5F:L3 SS MDI			SS Lab TC NS	7F:L11 EM/C-II BM		
Th	5F:LAB5 EM LAB L1 AV / BL -1F:LAB1 EM/C LAB-II L2 BM / SP 6F:LAB12 PE LAB L3 AB / HT					5F:L3 DE YS	5F:L3 PE AB		
Fr	6F:LAB12 PE LAB L1 AB / HT 5F:LAB5 EM LAB L2 AV / BL -1F:LAB1 EM/C LAB-II L3 BM / SP					7F:L9 EMI AV	6F:L8 BIO SV		
Sa	3F:LAB4 DE LAB L1 YS / HT -1F:LAB1 EM/C LAB-II L2 BM / BL 6F:LAB12 PE LAB L3 AB / PP					6F:L7 PE AB	6F:L7 SS MDI	SS Lab TC NS	

Timetable generated: 1/29/2019

aSc Timetables

AB - Mr.AJAY BHARADWAJ
AV - Mr.ANKIT VIJAY
BL - Mr.Bansi Lal
BM - Mr.BHARAT MODI
HT - Ms.Hansa Tanwar
KJ - Ms.KAVITA JAIN
MDI - MD IMRAN
NS - NIDHI SHARMA
PP - Mr.Prem Prakash
SP - Mr.Satyam Pandiya
SV - Sangeeta Vyas
YS - Md.YUSUF SHAREEF

Swami Keshvanand Institute of Technology, M&G, Jaipur

VI-EE-A

SKIT असतो मा सद्गमय

DEPARTMENT OF ELECTRICAL ENGINEERING

	1 08:00 - 09:00	2 09:00 - 10:00	3 10:00 - 11:00	4 11:00 - 12:00	5 11:00 - 11:30	6 11:30 - 12:30	7 12:30 - 01:30	8 01:30 - 02:30	9 02:30 - 03:30
Mo	6F:LAB9 APE LAB L1 NG / MR 6F:LAB11 SG LAB L2 VM / SS 5F:LAB6 CS LAB L3 TN / SK		6F:L7 PSI DA				7F:L9 ED ND	Group 1 5F:T1 PSI DA Group 2 7F:L12 APE AG	
Tu	6F:L7 MCT TN	6F:L7 PSI DA	6F:L7 APE AG			7F:L11 SGP RP	Group 1 5F:T1 MCT TN Group 2 7F:L12 SGP RP		
We	7F:L11 MCT TN	7F:L11 SGP RP	7F:L11 HVE GK			6F:LAB11 SG LAB L1 VM / SS 5F:LAB6 CS LAB L2 TN / SK 7F:LAB14 PS LAB L3 DA / Mr.X			
Th	7F:LAB14 PS LAB L1 Mr.X / MN 6F:LAB9 APE LAB L2 NG / MR 6F:LAB11 SG LAB L3 VM / SS		7F:L10 SGT VM			6F:L7 APE AG	6F:L7 MCT TN	6F:L7 HVE GK	
Fr	5F:LAB6 CS LAB L1 TN / SK 7F:LAB14 PS LAB L2 RP / Mr.X 6F:LAB9 APE LAB L3 VM / MR		7F:L10 PSI DA			5F:L3 ED ND	5F:L3 SGT VM	Group 1 7F:L11 SGP RP Group 2 7F:L10 PSI DA	
Sa	6F:L7 HVE GK	6F:L7 SGT VM				Group 1 5F:T1 APE AG Group 2 7F:L12 MCT TN	7F:L10 SGP RP	7F:L10 APE AG	

Timetable generated: 1/29/2019

aSc Timetables

AG - Mr.ABHISHEK GUPTA
DA - Mrs.DEEPTI ARELA
GK - Mr.GAURAV KANSAL
MN - Mr.MANISH NAVLAKHA
MR - Mr.Mahesh Rathodiya
Mr.X - Mr.X

NG - Mr.NIHIT GIRI
RP - Mr RAMESH PRAKASH
SK - Mr.Salman Khan
SS - Mr.Satyaveer Singh
TN - Mr.TARUN NARUKA
VM - Mr.VIKAS MAHALA

Swami Keshvanand Institute of Technology, M&G, Jaipur

VIII-EE-A

SKIT

DEPARTMENT OF ELECTRICAL ENGINEERING

	1 08:00 - 09:00	2 09:00 - 10:00	3 10:00 - 11:00	4 11:00 - 12:00	5 11:00 - 11:30	6 11:30 - 12:30	7 12:30 - 01:30	8 01:30 - 02:30	9 02:30 - 03:30
Mo	PPS 7F:L9 AKS	EDTC 7F:L9 MN	UEP 7F:L9 AN			EHV AC/DC 7F:L9 SN			
Tu	7F:LAB13 HVE LAB L1 DS 5F:LAB7 CBPS LAB L2 MDI / SK 7F:LAB15 EDTC LAB L3 MN / KS					UEP 7F:L9 AN	EDTC 7F:L9 MN		
We	PPS 7F:L9 AKS	EHV AC/DC 7F:L9 SN				6F:L8 SEMINAR Group 1 AT 7F:LAB16 PROJECT-II Group 2 AV			
Th	PPS 7F:L9 AKS	EHV AC/DC 7F:L9 SN	UEP 7F:L9 AN			EDTC 7F:L9 MN			
Fr	7F:LAB15 EDTC LAB L1 MN / KS 7F:LAB13 HVE LAB L2 DS 5F:LAB7 CBPS LAB L3 MDI / SS						EDTC 7F:L9 MN		
Sa	5F:LAB7 CBPS LAB L1 MDI / SS 7F:LAB15 EDTC LAB L2 MN / KS 7F:LAB13 HVE LAB L3 DS					7F:LAB16 PROJECT-II Group 1 AV 6F:L5 SEMINAR Group 2 AT			

Timetable generated: 1/29/2019

aSc Timetables

AKS - DR. AKASH SAXENA
AN - Mr.ARUN NAYAK
AT - Mr.ANKUSH TANDON
AV - Mr.ANKIT VIJAY
DS - Mr.DEEPAK SAINI
KS - Mr.Kulwant Singh
MDI - MD IMRAN
MN - Mr.MANISH NAVLAKHA
SK - Mr.Salman Khan
SN - DR.SARFARAZ NAWAZ
SS - Mr.Satyaveer Singh

SWAMI KESHVANAND INSTITUTE OF TECHNOLOGY, MANAGEMENT & GRAMOTHAN

GATE Section Students List (2018-19)

S. No.	University RollNo.	Name of Student
1	17ESKEE001	AAKRITI DWIVEDI
2	17ESKEE002	ABHIJEET PARASHAR
3	17ESKEE009	AKSHITA GUPTA
4	17ESKEE010	AMAN KUMAR GARG
5	17ESKEE011	ANANY JAIN
6	17ESKEE012	ANCHAL YADAV
7	17ESKEE014	ANIL
8	17ESKEE015	ANITA CHOUDHARY
9	17ESKEE016	ANUJ NAMA
10	17ESKEE022	AYUSHI MALHOTRA
11	17ESKEE023	BHANWAR LAL CHAUHAN
12	17ESKEE024	DEEPANSHU SHARMA
13	17ESKEE025	DEEPESH KUMAR MEENA
14	17ESKEE026	DEVANSHU GUPTA
15	17ESKEE027	DHANANJAY
16	17ESKEE035	HARSHIT GAUTAM
17	17ESKEE036	HARSHWARDHAN SINGH JADON
18	17ESKEE037	HEMANT KUMAR LOYAL
19	17ESKEE038	IKSHANSH VASHIST
20	17ESKEE039	IQBAL KHAN
21	17ESKEE040	JAYANT KUMAWAT
22	17ESKEE044	KIRTI MEENA
23	17ESKEE045	KRATIKA AGRAWAL
24	17ESKEE046	LAKSHITA SHARMA
25	17ESKEE047	LAVESH TIWARI
26	17ESKEE049	LOVISH BANSAL
27	17ESKEE050	MANAN JAIN
28	17ESKEE057	NAVEEN BALODA
29	17ESKEE058	NIDHI KUMARI
30	17ESKEE059	NIKHIL JAIN
31	17ESKEE060	NILESH KUMAR SHARMA
32	17ESKEE062	NISHANT AGARWAL
33	17ESKEE063	NITESH YADAV
34	17ESKEE064	NITIN BIJARNIA
35	17ESKEE095	Shivang Tiwari
36	17ESKEE096	Subhash Dudi
37	17ESKEE097	Sudhanshu Bhatnagar
38	17ESKEE098	Surbhi Maheshwari
39	17ESKEE099	Sushobhit Nigam
40	17ESKEE100	Swapnil Bhardwaj
41	17ESKEE101	Swechha Pachar
42	17ESKEE102	Tanmay Pancholi

43	17ESKEE103	Tanmay Tank
44	17ESKEE069	Pramod Meena
45	17ESKEE070	Pratik Mangla
46	17ESKEE071	Pushpendra Kachawatia
47	17ESKEE072	Rahul Kumawat
48	17ESKEE073	Rahul Saini
49	17ESKEE074	Rajat Jangid
50	17ESKEE075	Rajat Verma
51	17ESKEE077	Rajkumar Saini
52	17ESKEE078	Ram Gopal Sharma
53	17ESKEE079	Ranjan Jhajhriya
54	17ESKEE081	Ravi Malvia
55	17ESKEE701	Abdul Mateen
56	17ESKEE702	Abhay Singh
57	17ESKEE703	Abhishek Jadon
58	17ESKEE704	Aditya Dadhich
59	17ESKEE705	Ajay Kumar Dhavan
60	17ESKEE706	Amit Kumar
61	17ESKEE707	Ananya
62	17ESKEE710	Anshuman Vashishtha
63	17ESKEE711	Avadhesh Khandelwal
64	17ESKEE712	Bharat Khandelwal
65	17ESKEE714	Girish Kumar Singh
66	17ESKEE715	Harendra Chaudhary
67	17ESKEE717	Himanshu Goyal
68	17ESKEE718	Jai Sharma
69	17ESKEE719	Jugal Gaud
70	17ESKEE720	Kartike Raj Choudhary
71	17ESKEE721	Kunal Singh

Swami Keshvanand Institute of Technology, Management & Gramothan
Ramnagaria Jagatpura, Jaipur
Department of Electrical Engineering

SKIT/DEE/2017/ Date: 10.08.2017

NOTICE

Department of Electrical Engineering is organizing GATE classes for all students of II, III & IV year. Interested students kindly give their names to Batch Counselor. A separate section will be made as GATE Section at the department level. The detailed time table has been placed on department notice board.

Dr. Akash Saxena
HOD, EE

Copy to:

- Head
- All Faculty
- Notice File
- Notice Board

GATE syllabus 2018

EE	Electrical Engineering

Section 1: Engineering Mathematics

Linear Algebra: Matrix Algebra, Systems of linear equations, Eigenvalues, Eigenvectors.

Calculus: Mean value theorems, Theorems of integral calculus, Evaluation of definite and improper integrals, Partial Derivatives, Maxima and minima, Multiple integrals, Fourier series, Vector identities, Directional derivatives, Line integral, Surface integral, Volume integral, Stokes's theorem, Gauss's theorem, Green's theorem.

Differential equations: First order equations (linear and nonlinear), Higher order linear differential equations with constant coefficients, Method of variation of parameters, Cauchy's equation, Euler's equation, Initial and boundary value problems, Partial Differential Equations, Method of separation of variables.

Complex variables: Analytic functions, Cauchy's integral theorem, Cauchy's integral formula, Taylor series, Laurent series, Residue theorem, Solution integrals.

Probability and Statistics: Sampling theorems, Conditional probability, Mean, Median, Mode, Standard Deviation, Random variables, Discrete and Continuous distributions, Poisson distribution, Normal distribution, Binomial distribution, Correlation analysis, Regression analysis.

Numerical Methods: Solutions of nonlinear algebraic equations, Single and Multi-step methods for differential equations.

Transform Theory: Fourier Transform, Laplace Transform, z-Transform.

Electrical Engineering

Section 2: Electric Circuits

Network graph, KCL, KVL, Node and Mesh analysis, Transient response of dc and ac networks, Sinusoidal steady-state analysis, Resonance, Passive filters, Ideal current and voltage sources, Thevenin's theorem, Norton's theorem, Superposition theorem, Maximum power transfer theorem, Two-port networks, Three phase circuits, Power and power factor in ac circuits.

Section 3: Electromagnetic Fields

Coulomb's Law, Electric Field Intensity, Electric Flux Density, Gauss's Law, Divergence, Electric field and potential due to point, line, plane and spherical charge distributions, Effect of dielectric medium, Capacitance of simple configurations, Biot-Savart's law, Ampere's law, Curl, Faraday's law, Lorentz force, Inductance, Magnetomotive force, Reluctance, Magnetic circuits,Self and Mutual inductance of simple configurations.

Section 4: Signals and Systems

Representation of continuous and discrete-time signals, Shifting and scaling operations, Linear Time Invariant and Causal systems, Fourier series representation of continuous periodic signals, Sampling theorem, Applications of Fourier Transform, Laplace Transform and z-Transform.

Section 5: Electrical Machines

Single phase transformer: equivalent circuit, phasor diagram, open circuit and short circuit tests, regulation and efficiency; Three phase transformers: connections, parallel operation; Auto-transformer, Electromechanical energy conversion principles, DC machines: separately excited, series and shunt, motoring and generating mode of operation and their characteristics, starting and speed control of dc motors; Three phase induction motors: principle of operation, types, performance, torque-speed characteristics, no-load and blocked rotor tests, equivalent circuit, starting and speed control; Operating principle of single phase induction motors; Synchronous machines: cylindrical and salient pole machines, performance, regulation and parallel operation of generators, starting of synchronous motor, characteristics; Types of losses and efficiency calculations of electric machines.

Section 6: Power Systems

Power generation concepts, ac and dc transmission concepts, Models and performance of transmission lines and cables, Series and shunt compensation, Electric field distribution and insulators, Distribution systems, Per-unit quantities, Bus admittance matrix, Gauss-Seidel and Newton-Raphson load flow methods, Voltage and Frequency control, Power factor correction, Symmetrical components, Symmetrical and unsymmetrical fault analysis, Principles of over-current, differential and distance protection; Circuit breakers, System stability concepts, Equal area criterion.

Section 7: Control Systems

Mathematical modeling and representation of systems, Feedback principle, transfer function, Block diagrams and Signal flow graphs, Transient and Steady-state analysis of linear time invariant systems, Routh-Hurwitz and Nyquist criteria, Bode plots, Root loci, Stability analysis, Lag, Lead and Lead-Lag compensators; P, PI and PID controllers; State space model, State transition matrix.

Section 8: Electrical and Electronic Measurements

Bridges and Potentiometers, Measurement of voltage, current, power, energy and power factor; Instrument transformers, Digital voltmeters and multimeters, Phase, Time and Frequency measurement; Oscilloscopes, Error analysis.

Section 9: Analog and Digital Electronics

Characteristics of diodes, BJT, MOSFET; Simple diode circuits: clipping, clamping, rectifiers; Amplifiers: Biasing, Equivalent circuit and Frequency response; Oscillators and Feedback amplifiers; Operational amplifiers: Characteristics and applications; Simple active filters, VCOs and Timers, Combinational and Sequential logic circuits, Multiplexer, Demultiplexer, Schmitt trigger, Sample and hold circuits, A/D and D/A converters, 8085Microprocessor: Architecture, Programming and Interfacing.

Section 10: Power Electronics

Characteristics of semiconductor power devices: Diode, Thyristor, Triac, GTO, MOSFET, IGBT; DC to DC conversion: Buck, Boost and Buck-Boost converters; Single and three phase configuration of uncontrolled rectifiers, Line commutated thyristor based converters, Bidirectional ac to dc voltage source converters, Issues of line current harmonics, Power factor, Distortion factor of ac to dc converters, Single phase and three phase inverters, Sinusoidal pulse width modulation.

2017-18 (odd sem)

Swami Keshvanand Institute of Technology, M&G, Jaipur

III-EE-A

2017-18 (odd sem)

DEPARTMENT OF ELECTRICAL ENGINEERING

SKIT असतो मा सद्गमय

	1 08:00 - 09:00	2 09:00 - 10:00	3 10:00 - 11:00	4 11:00 - 12:00	11:00 - 11:30	5 11:30 - 12:30	6 12:30 - 01:30	7 01:30 - 02:30	8 02:30 - 03:30
Mo	6F:LAB11 CKT LAB L1 MDI 6F:LAB12 EDC LAB L2 VM 5F:LAB5 DE LAB L3 KJ		EM-1 5F:L3 SRO			Group 1 DE 5F:T2 KJ Group 2 EDC 7F:L12 VM	SS SS Lab SA	OOPS 5F:L3 DM	
Tu	AEM-1 5F:L3 PKU	CA-1 5F:L3 SRO				DE 5F:L3 KJ	HSS 6F:L8 NS	EDC 5F:L3 VM	
We	SS SS Lab SA	EDC 7F:L10 VM	AEM-1 7F:L10 PKU			6F:LAB11 CP LAB L1 DM 5F:LAB5 DE LAB L2 NG 6F:LAB12 EDC LAB L3 VM			
Th	5F:LAB5 DE LAB L1 KJ 6F:LAB11 CP LAB L2 DM 5F:LAB7 CKT LAB L3 MDI		EM-1 5F:L3 SRO			Group 1 EDC 5F:T2 VM Group 2 DE 7F:L12 KJ	EDC 5F:L3 VM	AEM-1 5F:L3 PKU	
Fr	HSS 6F:L8 NS	EM-1 5F:L3 SRO	EM-1 5F:L3 SRO			DE 5F:L3 KJ	OOPS 5F:L3 DM		
Sa	DE 5F:L3 KJ	CA-1 5F:L3 SRO				6F:LAB12 EDC LAB L1 NG 5F:LAB6 CKT LAB L2 MDI 6F:LAB11 CP LAB L3 DM		OOPS 5F:L3 DM	

Timetable generated: 7/12/2017

aSc Timetables

DM - Ms.DOLLY MITTAL
KJ - Ms.KAVITA JAIN
MDI - MD IMRAN
NG - Mr.NIHIT GIRI
NS - Dr.NIDHI SHARMA
PKU - Dr.PRAMILA KUMAWAT
SA - Dr.Shikha Agarwal
SRO - Mr.SHEESH RAM OLA
VM - Mr.VIKAS MAHALA

Swami Keshvanand Institute of Technology, M&G, Jaipur

V-EE-A

SKIT असतो मा सद्गमय

DEPARTMENT OF ELECTRICAL ENGINEERING

	1 08:00 - 09:00	2 09:00 - 10:00	3 10:00 - 11:00	4 11:00 - 12:00	11:00 - 11:30	5 11:30 - 12:30	6 12:30 - 01:30	7 01:30 - 02:30	8 02:30 - 03:30
Mo	CS 6F:L6 TN	CRT 6F:L6 JSG				MCA 6F:L6 ANJ	7F:LAB13 MCA LAB L1 ANJ 5F:LAB7 SP LAB L2 SN 6F:LAB10 DBMS LAB L3 LKS		
Tu	PE 6F:L6 SRO	TDEP 6F:L6 SN	DBMS 6F:L6 LKS			6F:LAB10 DBMS LAB L1 LKS 6F:LAB9 PE LAB L2 JR 7F:LAB13 MCA LAB L3 ANJ		OT 6F:L6 VS	
We	OT 6F:L6 VS	CRT 6F:L6 JSG				6F:LAB9 PE LAB L1 JR 7F:LAB13 MCA LAB L2 NJ 5F:LAB7 SP LAB L3 SN			
Th	CS 6F:L6 TN	DBMS 6F:L6 LKS	PEDM 6F:L6 ND				TDEP 6F:L6 SN	MCA 6F:L6 ANJ	
Fr	PE 6F:L6 SRO	CRT 6F:L6 AD				OT 6F:L6 VS	CS 6F:L6 TN	TDEP 6F:L6 SN	
Sa	PE 6F:L6 SRO	DBMS 6F:L6 LKS	MCA 6F:L6 ANJ			5F:LAB7 SP LAB L1 SN 6F:LAB10 DBMS LAB L2 LKS 6F:LAB9 PE LAB L3 JR			

Timetable generated: 7/12/2017

aSc Timetables

AD - Mr.AKASH DEO
ANJ - Mr.ABHINANDAN JAIN
JR - Mr.JINENDRA RAHUL
JSG - Mr.JITENDRA SINGH
LKS - Mr LOKESH KUMAR SHARMA
ND - Mr. NEERAJ DHAWAN
NJ - Mr.Neeraj Jain
SN - Mr.SARFARAZ NAWAZ
SRO - Mr.SHEESH RAM OLA
TN - Mr.TARUN NARUKA
VS - Dr.VIJAY SINGHAL

Swami Keshvanand Institute of Technology, M&G, Jaipur

VII-EE-A

SKIT असतो मा सद्गमय

DEPARTMENT OF ELECTRICAL ENGINEERING

	1 08:00 - 09:00	2 09:00 - 10:00	3 10:00 - 11:00	4 11:00 - 12:00	11:00 - 11:30	5 11:30 - 12:30	6 12:30 - 01:30	7 01:30 - 02:30	8 02:30 - 03:30
Mo	5F:LAB6 PSMS LAB L1 AB 7F:LAB14 PSP LAB L2 TC 6F:L8 PTS LAB L3 AT / JS		PSA 7F:L9 BB			PSP 7F:L9 AKS	EOPS 7F:L9 PK	NCES 7F:L9 ASAINI	
Tu	PSA 7F:L9 BB	PSA Group 1 7F:L12 BB EOPS Group 2 5F:T2 PK	IEM 7F:L10 MLB			NCES 6F:L5 ASAINI	7F:LAB14 PSP LAB L1 TC 5F:LAB6 PSMS LAB L2 AB 7F:LAB16 PROJECT-1 L3 AG / AV		
We	AIT 7F:L9 GK	PSA 7F:L9 BB				PSE 7F:L9 TC	EOPS Group 1 5F:T2 PK PSE Group 2 7F:L12 TC		
Th	PSE 7F:L9 TC	PSP 7F:L9 AKS	IEM 7F:L10 MLB			7F:LAB16 PROJECT-1 L1 AV / TC 6F:L8 PTS LAB L2 AT / TN 5F:LAB6 PSMS LAB L3 AB			
Fr	NCES 7F:L9 ASAINI	PSE 7F:L9 TC	AIT 7F:L9 GK				EOPS 7F:L9 PK	PSE Group 1 5F:T2 TC PSA Group 2 7F:L12 BB	
Sa	PSP 7F:L9 AKS	EOPS 7F:L9 PK				6F:L8 PTS LAB L1 AT / BB 7F:LAB16 PROJECT-1 L2 AG / AV 7F:LAB14 PSP LAB L3 TC		AIT 7F:L9 GK	

Timetable generated: 7/12/2017

aSc Timetables

AB - Mr.AJAY BHARADWAJ
AG - Mr.ABHISHEK GUPTA
AKS - Dr.AKASH SAXENA
ASAINI - Mr.ASHISH SAINI
AT - Mr.ANKUSH TANDON
AV - Mr.ANKIT VIJAY
BB - Ms.BAIBHAV BISHAL
GK - Mr.GAURAV KANSAL
JS - Mr.JITENDRA SHARMA
MLB - Mr.MOHAN LAL BHARGAVA
PK - Mr.PANKAJ KUMAR
TC - Mr.TARUN CHEEPA
TN - Mr.TARUN NARUKA

Swami Keshvanand Institute of Technology, M&G, Jaipur

2017-18 (Even sem)

IV-EE-A

SKIT असतो मा सद्गमय

DEPARTMENT OF ELECTRICAL ENGINEERING

	1 08:00 - 09:00	2 09:00 - 10:00	3 10:00 - 11:00	4 11:00 - 12:00	5 11:00 - 11:30	6 11:30 - 12:30	7 12:30 - 01:30	8 01:30 - 02:30	9 02:30 - 03:30
Mo	3F:LAB3 EMD LAB L1 RP 6F:LAB12 AE LAB L2 SL 5F:LAB5 EM LAB L3 NG					AE 6F:L5 SL	CA-II 6F:L5 NG	GEP 6F:L5 JR	
Tu	CA-II 7F:L10 NG	GEP 7F:L10 JR	AEM 7F:L10 SS			EM/C-II 7F:L11 RP	EM 7F:L11 TC	AE 7F:L11 SL	
We	5F:LAB5 EM LAB L1 NG 3F:LAB4 PSD LAB L2 VSH -1F:LAB1 EM/C LAB L3 BM		EM 6F:L8 TC			Group 1 EM/C-II 6F:L5 RP Group 2 AE 7F:L11 SL	Group 1 CA-II 5F:T2 NG Group 2 AEM 7F:L12 SS		
Th	-1F:LAB1 EM/C LAB L1 BM 3F:LAB3 EMD LAB L2 YS 6F:LAB12 AE LAB L3 SL		GEP 7F:L9 JR			EM 6F:L8 TC	AE 6F:L8 SL	Group 1 EM 7F:L9 TC Group 2 CA-II 5F:T1 NG	
Fr	EM/C-II 7F:L11 RP	AEM 7F:L11 SS	Group 1 AEM 5F:T2 SS Group 2 EM 7F:L12 TC			6F:LAB12 AE LAB L1 SL 5F:LAB5 EM LAB L2 NG 3F:LAB4 PSD LAB L3 VSH			
Sa	3F:LAB4 PSD LAB L1 VSH -1F:LAB1 EM/C LAB L2 BM 3F:LAB3 EMD LAB L3 AN		EM/C-II 6F:L8 RP			Group 1 AE 7F:L10 SL Group 2 EM/C-II 6F:L5 RP	AEM 6F:L5 SS	CA-II 6F:L5 NG	

Timetable generated: 1/10/2018

aSc Timetables

AN - Mr.ARUN NAYAK
BM - Mr.BHARAT MODI
JR - Mr.JINENDRA RAHUL
NG - Mr.NIHIT GIRI
RP - Mr RAMESH PRAKASH
SL - Mr.Sunil Lakhawat
SS - Dr.Shalini Shekawat
TC - Mr.TARUN CHEEPA
VSH - Mr.VIVEK SHARMA
YS - Md.YUSUF SHAREEF

Swami Keshvanand Institute of Technology, M&G, Jaipur

VI-EE-A

SKIT

DEPARTMENT OF ELECTRICAL ENGINEERING

	1 08:00 - 09:00	2 09:00 - 10:00	3 10:00 - 11:00	4 11:00 - 12:00	5 11:00 - 11:30	6 11:30 - 12:30	7 12:30 - 01:30	8 01:30 - 02:30	9 02:30 - 03:30
Mo	5F:LAB7 CS LAB L1 DC 6F:LAB11 SG LAB L2 VM 6F:LAB9 APE LAB L3 JR		6F:L8 HVE DS			SS Lab CET LG	7F:L10 SGP VKS	Group 1 5F:T2 MCT DC Group 2 7F:L12 APE JSG	
Tu	6F:L6 SGT VM	6F:L6 PSI RM	6F:L6 ED ND			6F:L6 HVE DS	6F:L6 APE JSG	Group 1 6F:L8 SGP VKS Group 2 7F:L12 PSI RM	
We	6F:L6 PSI RM	6F:L6 MCT DC	SS Lab CET LG			7F:LAB14 PS LAB L1 PK 6F:LAB9 APE LAB L2 JR 6F:LAB11 SG LAB L3 VM			
Th	6F:L6 MCT DC	6F:L6 APE JSG	6F:L6 PSI RM			6F:LAB11 SG LAB L1 VM 5F:LAB7 CS LAB L2 DC 7F:LAB14 PS LAB L3 PK		Group 1 6F:L5 APE JSG Group 2 7F:L12 SGP VKS	
Fr	6F:L8 SGT VM	6F:LAB9 APE LAB L1 JR 7F:LAB14 PS LAB L2 PK 5F:LAB7 CS LAB L3 DC				6F:L6 HVE DS	6F:L6 SGP VKS	Group 1 7F:L10 PSI RM Group 2 7F:L9 MCT DC	
Sa	6F:L6 MCT DC	SS Lab CET LG	6F:L6 SGT VM			6F:L6 APE JSG	6F:L6 SGP VKS		

Timetable generated: 1/10/2018

aSc Timetables

DC - Mr.DHANRAJ CHITARA
DS - Mr.DEEPAK SAINI
JR - Mr.JINENDRA RAHUL
JSG - Mr.JITENDRA SINGH
LG - Dr. LALIT GEHLOT
ND - Mr. NEERAJ DHAWAN
PK - Mr.PANKAJ KUMAR
RM - Mrs.RAMMURTI MEENA
VKS - Mr.VIKRAM SINGH
VM - Mr.VIKAS MAHALA

Swami Keshvanand Institute of Technology, M&G, Jaipur

VIII-EE-A

SKIT

DEPARTMENT OF ELECTRICAL ENGINEERING

	1 08:00 - 09:00	2 09:00 - 10:00	3 10:00 - 11:00	4 11:00 - 12:00	5 11:00 - 11:30	6 11:30 - 12:30	7 12:30 - 01:30	8 01:30 - 02:30	9 02:30 - 03:30
Mo	5F:LAB6 CBPS LAB L1 BB 7F:LAB15 EDTC LAB L2 KJ 7F:LAB13 HVE LAB L3 GK		6F:L7 EHV AC/DC NM			7F:L9 EDTC MN			
Tu	7F:L9 EHV AC/DC NM	7F:L9 EDTC MN	7F:L9 UEP BB			5F:LAB6 CBPS LAB L2 BB 7F:LAB15 EDTC LAB L3 AD	7F:LAB16 PROJECT-II L1 AG / AV		
We	7F:L9 PPS GK	7F:L9 EDTC MN	7F:L9 EHV AC/DC NM			7F:LAB13 HVE LAB L1 GK 6F:L8 SEMINAR L2 DA / JS 7F:LAB16 PROJECT-II L3 AG / AS			
Th	7F:L9 EDTC MN	7F:L9 UEP BB				7F:L9 PPS GK			
Fr	7F:L9 PPS GK	7F:L9 UEP BB	7F:L9 EHV AC/DC NM			7F:LAB15 EDTC LAB L1 MN 7F:LAB13 HVE LAB L2 GK 6F:L8 SEMINAR L3 RM / DA			
Sa	6F:L8 SEMINAR L1 RM / DA 7F:LAB16 PROJECT-II L2 AG / AV 5F:LAB6 CBPS LAB L3 BB		7F:L11 PPS GK			7F:L11 UEP BB			

Timetable generated: 1/10/2018

aSc Timetables

AD - Mr.AKASH DEO
AG - Mr.ABHISHEK GUPTA
AS - Mr.AVADHESH SHARMA
AV - Mr.ANKIT VIJAY
BB - Ms.BAIBHAV BISHAL
DA - Mrs.DEEPTI ARELA
GK - Mr.GAURAV KANSAL
JS - Mr.JITENDRA SHARMA
KJ - Ms.KAVITA JAIN
MN - Mr.MANISH NAVLAKHA
NM - Ms.NIKITA MITTAL
RM - Mrs.RAMMURTI MEENA

SWAMI KESHVANAND INSTITUTE OF TECHNOLOGY MANAGEMENT & GRAMOTHAN

GATE Section Student List (2017-18)

S. No.	Roll	Students Name
1	16ESKEE007	Abhishek Vashishtha
2	16ESKEE008	Adil Rayees Ansari
3	16ESKEE009	Aditya Chauhan
4	16ESKEE010	Aditya Kumar Gupta
5	16ESKEE011	Aditya Sharma
6	16ESKEE012	Ajay Roj
7	16ESKEE013	Akash Jha
8	16ESKEE014	Akshat Joshi
9	16ESKEE015	Akshay Kumar
10	16ESKEE016	Aman Gupta
11	16ESKEE017	Ankit Dhayal
12	16ESKEE023	Atul Sharma
13	16ESKEE024	Avinash Soni
14	16ESKEE025	Ayush Bhardwaj
15	16ESKEE027	Cheshta Choudhary
16	16ESKEE028	Darshan Sharma
17	16ESKEE029	Deepanshu Mittal
18	16ESKEE048	Lakshaya Kumawat
19	16ESKEE049	Lalit Kishor Tiwari
20	16ESKEE051	Madhvendra Singh
21	16ESKEE052	Mamta Mishra
22	16ESKEE053	Manan Deora
23	16ESKEE054	Manav Chauhadiya
24	16ESKEE055	Manish Faujdar
25	16ESKEE056	Manish Kumar Jain
26	16ESKEE062	Mayank Gupta
27	16ESKEE063	Mayank Gupta
28	16ESKEE064	Mayank Kumar Pankaj
29	16ESKEE065	Mohd Danish
30	16ESKEE066	Mohit Kumar Verma
31	16ESKEE067	Monika Rathore
32	16ESKEE068	Mukul Jain
33	16ESKEE069	Mukul Kumar
34	16ESKEE070	Mukul Saini
35	16ESKEE084	Parikha Sharma
36	16ESKEE085	Pawan Kumar
37	16ESKEE086	Pawan Kumar
38	16ESKEE087	Prachi Raman
39	16ESKEE088	Pragya Jain
40	16ESKEE089	Priyanka Meena
41	16ESKEE091	Radhika Agrawal
42	16ESKEE092	Rahul Singh Rathore
43	16ESKEE093	Rajat Agrawal
44	16ESKEE094	Rakesh Choudhary
45	16ESKEE096	Ravi Choudhary

46	16ESKEE097	Ravi Jain
47	16ESKEE098	Ravi Shankar Verma
48	16ESKEE099	Robin Singh
49	16ESKEE118	Sushil Kumar Sharma
50	16ESKEE119	Tarun Agarwal
51	16ESKEE120	Vaibhav Kulshrestha
52	16ESKEE121	Ved Prakash Meena
53	16ESKEE702	Abhishek Sharma
54	16ESKEE703	Anmol Kumar Joshi
55	16ESKEE704	Anshul Agarwal
56	16ESKEE705	Apurva
57	16ESKEE706	Aryaman Gupta
58	16ESKEE708	Ashish Kumar Pathak
59	16ESKEE709	Ashish Sain
60	16ESKEE711	Avik Sharma
61	16ESKEE737	Nishpax Jain
62	16ESKEE738	Pankaj Sharma
63	16ESKEE739	Pawan Kumar
64	16ESKEE740	Pawan Sharma
65	16ESKEE741	Piyush Prajapat
66	16ESKEE742	Pranshu Gupta
67	16ESKEE743	Pranshul Kumar
68	16ESKEE745	Priya Gupta
69	16ESKEE746	Pulkit Jain
70	16ESKEE747	Rahul Sharma

Swami Keshvanand Institute of Technology, Management & Gramothan
Ramnagaria Jagatpura, Jaipur
Department of Electrical Engineering

SKIT/DEE/2016/

Date: 08.08.2016

NOTICE

Department of Electrical Engineering is organizing GATE classes for all students of II, III & IV year. Interested students kindly give their names to Batch Counselor. A separate section will be made as GATE Section at the department level. The detailed time table has been placed on department notice board.

Dr. Akash Saxena
HOD, EE

Copy to:

- Head
- All Faculty
- Notice File
- Notice Board

GATE 2017 ELECTRICAL ENGINEERING SYLLABUS:

Section 1:

Engineering Mathematics Linear Algebra: Matrix Algebra, Systems of linear equations, Eigenvalues, Eigenvectors. Calculus: Mean value theorems, Theorems of integral calculus, Evaluation of definite and improper integrals, Partial Derivatives, Maxima and minima, Multiple integrals, Fourier series, Vector identities, Directional derivatives, Line integral, Surface integral, Volume integral, Stokes's theorem, Gauss's theorem, Green's theorem. Differential equations: First order equations (linear and nonlinear), Higher order linear differential equations with constant coefficients, Method of variation of parameters, Cauchy's equation, Euler's equation, Initial and boundary value problems, Partial Differential Equations, Method of separation of variables. Complex variables: Analytic functions, Cauchy's integral theorem, cauchy's Integral formula, Taylor series, Laurent series, Residue theorem, Solution integrals. Probability and Statistics: Sampling theorems, Conditional probability, Mean, Median, Mode, Standard Deviation, Random variables, Discrete and Continuous distributions, Poisson distribution, Normal distribution, Binomial distribution, Correlation analysis, Regression analysis. Numerical Methods: Solutions of nonlinear algebraic equations, Single and Multi-step methods for differential equations. Transform Theory: Fourier Transform, Laplace Transform, z-Transform.

Section 2:

Electric Circuits:Network graph, KCL, KVL, Node and Mesh analysis, Transient response of dc and ac networks, Sinusoidal steady state analysis, Resonance, Passive filters, Ideal current and voltage sources, Thevenin's theorem, Norton's theorem, Superposition theorem, Maximum power transfer theorem, Two-port networks, Three phase circuits, Power and power factor in ac circuits.

Section 3:

Electromagnetic Fields : Coulomb's Law, Electric Field Intensity, Electric Flux Density, Gauss's Law, Divergence, Electric field and potential due to point, line, plane and spherical charge distributions, Effect of dielectric medium, Capacitance of simple configurations, Blot-Savart's law, Ampere's law, Curl, Faraday's law, Lorentz force, Inductance, Magnetomotive force, Reluctance, Magnetic circuits, Self an d Mutual inductance of simple configurations.

Section 4:

Signals and Systems: Representation of continuous and discrete-time signals, Shifting and scaling operations, Linear Time Invariant and Causal systems, Fourier series representation of continuous periodic signals, Sampling theorem, Applications of Fourier Transform, Laplace Transform and zTransform.

Section 5:

Electrical Machines: Single phase transformer: equivalent circuit, phasor diagram, open circuit and short circuit tests, regulation and efficiency; Three phase transformers: connections, parallel operation; Auto-transformer, Electromechanical energy conversion principles, DC machines: separately excited, series and shunt, motoring and generating mode of operation and their characteristics, starting and speed control of dc motors; Three phase induction motors: principle of operation, types, performance, torque-speed characteristics, no-load and blocked rotor tests, equivalent circuit, starting and speed control; Operating principle of single phase induction motors; Synchronous machines: cylindrical and salient pole machines, performance, regulation and parallel operation of generators, starting of synchronous motor, characteristics; Types of losses and efficiency calculations of electric machines.

Section 6:

Power Systems: Power generation concepts, ac and dc transmission concepts, Models and performance of transmission lines and cables, Series and shunt compensation, Electric field distribution and insulators, Distribution systems, Per-unit quantities, Bus admittance matrix, Gauss-Seidel and NewtonRaphson load flow methods, Voltage and Frequency control, Power factor correction, Symmetrical components, Symmetrical and unsymmetrical fault analysis, Principles of over-current, differential and distance protection; Circuit breakers, System stability concepts, Equal area criterion.

Section 7:

Control Systems: Mathematical modeling and representation of systems, Feedback principle, transfer function, Block diagrams and Signal flow graphs, Transient and Steadystate analysis of linear time invariant systems, Routh-Hurwitz and Nyquist criteria, Bode plots, Root loci,Stablity analysis, Lag, Lead and Lead-Lag compensators; P, Pl and PID controllers; State space model, State transition matrix. Section 8: Electrical and Electronic Measurements: Bridges and Potentiometers, Measurement of voltage, current, power, energy and power

factor, Instrument transformers, Digital voltmeters and multimeters, Phase, Time and Frequency measurement; Oscilloscopes, Error analysis.

Section 9:

Analog and Digital Electronics: Characteristics of diodes, BJT, MOSFET; Simple diode circuits: clipping, clamping, rectifiers. Amplifiers: Biasing, Equivalent circuit and Frequency response; Oscillators and Feedback amplifiers; Operational amplifiers: Characteristics and applications, Simple active filters, VCOs and Timers, Combinational and Sequential logic circuits, Multiplexer, Demultiplexer, Schmitt trigger, Sample and hold circuits, A/D and D/A converters, 8085 Microprocessor: Architecture, Programming and Interfacing.

Section 10:

Power Electronics: Characteristics of semiconductor power devices: Diode, Thyristor, Triac, GTO, MOSFET, IGBT. DC to DC conversion: Buck, Boost and BuckBoost converters; Single and three phase configuration of uncontrolled rectifiers, Line commutated thyristor based converters, Bidirectional ac to dc voltage source converters, Issues of line current harmonics, Power factor, Distortion factor of ac to dc converters, Single phase and three phase inverters, Sinusoidal pulse width modulation.

Department of Electrical Engineering

2016-2017 (odd Sem)

Sem: III | **Section : A**

Day/ Time	8 -9:00	9:00- 10:00	10:00-11:00	11-11:30	11:30-12:30	12:30-1:30	1:30-2:30
MON	OOPS LAB ,L1,DM,5F:EE-LAB-6 EDC LAB,L2,VM,6F:EE-LAB-12 ELECTRICAL CIRCUIT LAB,L3,BB,5F:EE-LAB-7		DE (T),G1,KJ, 7F:L12	LUNCH	DE LAB,L1,KJ,5F:EE-LAB-5 OOPS LAB ,L2,DM,5F:EE-LAB-6 EDC LAB,L3,VM,6F:EE-LAB-12		EM/C-I (L) RP 5F:L3
TUE	DE (L) KJ 6F:L6	OOPS (L) DM 6F:L6	CA-I(L) BB 6F:L6		AEM (L) SGu 6F:L6	HSS NS 7F:L-12	CA-I (T),G1,BB, 7F:L12 EDC (T),G2,VM, 7F:L11
WED	AEM (L) SGu 6F:L6	OOPS (L) DM 6F:L6	CA-I(L) BB 6F:L6		ELECTRICAL CIRCUIT LAB,L1,BB,6F:EE-LAB-11 DE LAB,L2,KJ,5F:EE-LAB-5 OOPS LAB ,L3,DM,5F:EE-LAB-6		***WEDNESDAY ACTIVITY***
THU	DE (L) KJ 6F:L6	EM/C (T),G1,RP, 7F:L12 DE (T),G2,KJ, 7F:L11	CA-I(L) BB 6F:L7		EDC (L) VM 6F:L6	OOPS (L) DM 6F:L6	EM/C-I (L) RP 6F:L6
FRI	SS SAM	EDC (T),G1,VM, 7F:L12 CA-I (T),G2,BB, 7F:L11	AEM (L) SGu 6F:L7		EM/C-I (L) RP 6F:L6	DE (L) KJ 6F:L6	EDC (L) VM 6F:L6
SAT	EDC LAB,L1,VM,6F:EE-LAB-12 ELECTRICAL CIRCUIT LAB,L2,BB,5F:EE-LAB-6 DE LAB,L3,KJ,5F:EE-LAB-5		HSS NS 7F:L-12		SS SAM	EDC (L) VM 6F:L6	EM/C (T),G2,RP, 7F:L11

VM	Mr. Vikas Mahala
BB	Ms. Baibhav Bishal
KJ	Mrs.Kavita jain
NS	NIDHI SHARMA

Sgu	Mr. Sumit Gupta
DM	Ms. Dolly Mittal
RP	Mr. Ramesh Prakash
SAM	SHIBA ANJUM

(Time Table Coordinator)

(Head of Deptt.)

Department of Electrical Engineering

2016-2017 (odd Sem)

Sem: V | **Section : A**

Day/ Time	8 -9:00	9:00- 10:00	10:00-11:00	11-11:30	11:30-12:30	12:30-1:30	1:30-2:30
MON	CRT (5F:L3) NM+AG		EDM(L) 6F:L8 ND	L U N C H	µP LAB,L1,SL,7F:EE LAB-13 SP LAB,L2,JS,6F:EE LAB-11 DBMS LAB,L3, SS,5F:EE LAB-7		
TUES	DBMS LAB,L1,PM,5F:EE LAB-7 PE LAB,L2,JSg,6F:EE LAB-9 µP LAB,L3,SL,7F:EE LAB-13		T&D(L) SN 6F:L5		CS(L) 5F:L3 NM	PE(L) 5F:L3 AG	OT(L) 5F:L3 VS
WED	CRT (5F:L3) AG		T&D(L) SN 5F:L3		µP(L) 5F:L3 SL	DBMS(L) 5F:L3 PM	*WEDNESDAY ACTIVITY*
THURS	DBMS(L) 5F:L3 PM	PE LAB,L1,JR,6F:EE LAB-9 µP LAB,L2,NJ,7F:EE LAB-13 SP LAB,L3,JS,6F:EE LAB-11			PE(L) 5F:L3 AG	OT(L) 5F:L3 VS	CS(L) 5F:L3 NM
FRI	CRT (5F:L3) NM		T&D(L) SN 5F:L3		DBMS(L) 5F:L3 PM	µP(L) 5F:L3 SL	
SAT	SP LAB,L1,JS,6F:EE LAB-11 DBMS LAB,L2,PM,5F:EE LAB-7 PE LAB,L3,JR,6F:EE LAB-9		PE(L) 6F:L5 AG		OT(L) 5F:L3 VS	CS(L) 5F:L3 NM	µP(L) 5F:L3 SL

AG	Mr. Abhishek Gupta
NM	Ms. Nikita Mittal
PM	Ms. Priyanka Mill
JSg	Mr. Jitendra Singh
JS	Ms. Juhi Singhal
ND	Mr. Neeraj Dhawan

VS	Mr. Vijay Singhal
SN	Md. Sarfaraz Nawaz
SL	Mr. Sunil Lakhawat
JR	Mr. Jinendra Rahul
SS	Ms.SHALINI SINGHAL

(Time Table Coordinator)

(Head of Deptt.)

Department of Electrical Engineering

2016-2017 (odd Sem)

Sem: VII | **Section : A**

Day/ Time	8 -9:00	9:00- 10:00	10:00-11:00	11-11:30	11:30-12:30	12:30-1:30	1:30-2:30
MON	PSE(L) 7F:L9 SA	AI(L) 7F:L9 GK	PSA(L) 7F:L9 MdI	LUNCH	NCES(L) 7F:L10 TC	EOPS(L) 7F:L10 RQ	PSE(T),G1,7F:L12,SA EOPS(T),G2,7F:L11,RQ
TUES	PTS LAB,L1,JSh+AT,6F:L8 PROJECT LAB,L2,AV+AG,7F:EE LAB-16 PSP LAB,L3,AJ,7F:EE LAB-14		EOPS(L) 6F:L8 RQ		EOPS(T),G1,7F:L12,RQ PSA(T),G2,7F:L11,MdI	PSE(L) 7F:L9 SA	PSP(L) 7F:L9 AJ
WED	EOPS(L) 7F:L9 RQ	NCES(L) 7F:L9 TC	IEM(L) 7F:L9 MLB		PROJECT LAB,L1,AV+AG,7F:EE LAB-16 PSP LAB,L2,AJ,7F:EE LAB-14 PSMS LAB,L3,BM,5F:EE LAB-7		***WEDNESDAY ACTIVITY***
THURS	PSP(L) 7F:L9 AJ	PSA(L) 7F:L9 MdI	IEM(L) 7F:L9 MLB		PSP LAB,L1,AJ,7F:EE LAB-14 PSMS LAB,L2,BM,5F:EE LAB-7 PTS LAB,L3,TN+AT,6F:L8		PSA(T),G1,7F:L12,MdI PSE(T),G2,7F:L11,SA
FRI	PSMS LAB,L1,AB,5F:EE:L-7 PTS LAB,L2,JSh+AT,6F:L8 PROJECT LAB,L3,AV+AG,7F:EE LAB-16		PSP(L) 7F:L9 AJ		AI(L) 7F:L9 GK		
SAT	PSE(L) 7F:L9 SA	AI(L) 7F:L9 GK	PSA(L) 7F:L9 MdI		NCES(L) 7F:L9 TC		

AJ	Ms. Anjali Jain
TC	Mr. Tarun Cheepa
MdI	Md. Imran
RQ	Mrs. Rida Qureshi
AV	Mr. Ankit Vijayvargiya
AG	Mr. Abhishek Gupta
AT	Mr. Ankush Tandon

BM	Mr. Bharat Modi
AB	Mr. Ajay Bhardwaj
SA	Mr. Shobhit Ahuja
JSh	Mr. Jitendra Sharma
MLB	Prof. M. L. Bhargava
GK	Mr. Gaurav Kansal

(Time Table Coordinator)

(Head of Deptt.)

Department of Electrical Engineering

2016-2017 (Even Sem)

Sem: IV | **Section : A** | **Effective from:**

Day/ Time	8 -9:00	9:00- 10:00	10:00-11:00	11-11:30	11:30-12:30	12:30-1:30	1:30-2:30
MON	EMD LAB,L1, NM,3F:EE:LAB3 AE LAB,L2, NG,6F:EE:LAB12 EMI LAB,L3, TC,5F:EE:LAB5		CA-II (L) 6F:L7 GG	LUNCH	EM-II(T),G1 RP, 7F:L11 AE (T),G2 NG, 7F:L12	GEP (L) 6F:L7 NM	AE(L) 6F:L7 NG
TUE	AE(L) 6F:L7 NG	CA-II (L) 6F:L7 GG	AEM-II(L) 6F:L7 VS		EMI (L) 6F:L7 TC	EM-II (L) 6F:L7 RP	
WED	EMI LAB,L1, TC,5F:EE:LAB5 PSD LAB,L2, VSH,3F:EE:LAB4 EM-II LAB,L3, RP,-1F:EE:LAB1		CA-II (L) 5F:L3 GG		CA-II(T),G1 GG, 7F:L11 AEM-II(T),G2 VS, 7F:L12	EMI (L) 6F:L6 TC	***WEDNESDAY ACTIVITY***
THU	EM-II LAB,L1, DS,-1F:EE:LAB1 EMD LAB,L2, NM,3F:EE:LAB3 AE LAB,L3, NG,6F:EE:LAB12		CA-II(T),G2 GG, 7F:L12 EMI(T),G1 TC, 7F:L11		GEP (L) 6F:L7 NM		EM-II (L) 6F:L6 RP
FRI	EMI (L) 6F:L7 TC	EMI(T),G2 TC, 7F:L12 AEM-II(T),G1 VS, 7F:L11	AEM-II(L) 6F:L5 VS		AE LAB,L1, NG,6F:EE:LAB12 EMI LAB,L2, TC,5F:EE:LAB5 PSD LAB,L3, VSH,3F:EE:LAB4		GEP (L) 6F:L5 NM
SAT	EM-II (L) 6F:L7 RP	AE(L) 6F:L7 NG	AEM-II(L) 6F:L7 VS		AE(T),G1 NG, 6F:L7 EM-II(T),G2 RP, 7F:L9	PSD LAB,L1, JSG,3F:EE:LAB4 EM-II LAB,L2, DS,-1F:EE:LAB1 EMD LAB,L3, NM,3F:EE:LAB3	

GG	Mr. Garvit Gupta
TC	Mr. Tarun Cheepa
VS	Dr. Vijay Singhal
NG	Mr. Nihit Giri
JSG	Mr.Jitendra Singh

NM	Ms Nikita Mittal
VSH	Mr.Vivek Sharma
RP	Mr. Ramesh Prakash
AJ	Ms. Anjali Jain
DS	Mr.Deepak Saini

(Time Table Coordinator)

(Head of Deptt.)

Department of Electrical Engineering

2016-2017 (Even Sem)

Sem: VI | **Section : A** | **Effective from: 11/1/17**

Day/ Time	8:00-9:00	9:00-10:00	10:00-11:00	11-11:30	11:30-12:30	12:30-1:30	1:30-2:30
MON	CS LAB,L1, TN,5F:EE:LAB7 PS LAB,L2,PJ,7F:EE:LAB14 APE LAB,L3, JR,6F:EE:LAB9		SGT(L) 6F:L5 VM	LUNCH	ED(L) 6F:L5 HM	SGP(L) 7F:L10 AJ	APE(L) 6F:L5 AG
TUES	MCT(L) 6F:L5 TN	SGT(L) 6F:L5 VM	ED(L) 6F:L5 HM		PSI(L) 6F:L5 DA	CET(L) SS CELL 1F NS	MCT(L) TN 7F:L10
WED	SGP(L) 6F:L5 AJ	HVE(L) 6F:L5 GK	SGT(L) 6F:L5 VM		PS LAB,L1,PJ,7F:EE:LAB14 APE LAB,L2, JSG,6F:EE:LAB9 SG LAB,L3, AD,6F:EE:LAB11		*WEDNESDAY ACTIVITY*
THURS	MCT(L) 6F:L5 TN	HVE(L) 6F:L5 GK	PSI(L) 6F:L5 DA		SG LAB,L1, VM,6F:EE:LAB11 CS LAB,L2, TN,5F:EE:LAB7 PS LAB,L3, VKS,7F:EE:LAB14		CET(L) SS CELL 1F NS
FRI	HVE(L) 6F:L6 GK	APE LAB,L1, JR,6F:EE:LAB9 SG LAB,L2, VM,6F:EE:LAB11 CS LAB,L3, TN,5F:EE:LAB7			SGP(L) 6F:L5 AJ	APE(L) 6F:L5 AG	PSI(L) DA 7F:L10
SAT	APE(L) 6F:L5 AG	APE(L) 7F:L10 AG	SGP(L) 6F:L5 AJ		MCT(L) 6F:L5 TN	PSI(L) 6F:L5 DA	CET(L) SS CELL 1F NS

JSg	Mr. Jitendra Singh
GK	Mr. Gaurav Kansal
TN	Mr. Tarun Naruka
VM	Mr. Vikas Mahala
NS	Mrs.Neerja Saraswat
DA	Mrs. Deepti Arela
AJ	Ms.Anjali Jain

JR	Mr. Jinendra Rahul
VKS	Mr. Vikaram Singh
PJ	Mrs.POOJA JAIN
AG	Mr. Abhishek Gupta
AD	Akash Dev
HM	Harminder multani

(Time Table Coordinator)

(Head of Deptt.)

Department of Electrical Engineering

2016-2017(EVENSem)

Sem: VIII | **Section : A** | **Effective from:**

Day/ Time	8:00 -9:00	9:00- 10:00	10:00-11:00	11-11:30	11:30-12:30	12:30-1:30	1:30-2:30
MON	CBPS LAB L1, BB 5F:EE:LAB6			LUNCH	EDTC(L) 7F:L9 PJ		
	EDTC LAB L2 ,YS 7F:EE:LAB15						
	HVE LAB L3, GK 7F:EE:LAB13						
TUES	PPS(L) 7F:L9 MDI	EDTC(L) 7F:L9 PJ	UEP(L) 7F:L9 PK		EDTC LAB L3 ,YS 7F:EE:LAB15		
					CBPS LAB L2, BB 5F:EE:LAB6		
						PROJECT LAB L1, (AV+AG)7F:EE:LAB16	
WED	EHV AC/DC(L) 7F:L9 VKS	PPS(L) 7F:L9 MDI	EHV AC/DC(T),G1 5F:T1 VKS		PROJECT LAB,L3,AS+AG,7F:EE LAB-16		WEDNESDAY ACTIVITY
			EDTC(T), G2 7F:L12 PJ		SEMINAR ,L2,DA+JS,6F:L8		
					HVE LAB L1, VKS7F:EE:LAB13		
THURS	UEP(L) 7F:L9 PK	EDTC(L) 7F:L9 PJ	EHV AC/DC(L) 7F:L9 VKS				
FRI	PPS(L) 7F:L9 MDI	UEP(L) 7F:L9 PK	EHV AC/DC(L) 7F:L9 VKS		EDTC LAB L1 ,YS 7F:EE:LAB15		
					HVE LAB L2, VKS7F:EE:LAB13		
					SEMINAR ,L3,DA+JS,6F:L8		
SAT	CBPS LAB L3, BB 5F:EE:LAB6				EHV AC/DC(T),G2 7F:L12 VKS		
	SEMINAR ,L1,MDI+JS,6F:L8						
	PROJECT LAB L2, (AV +AS)7F:EE:LAB16				EDTC(T), G1 7F:L10 PJ		

PK	Mr.Pankaj Kumar
PJ	Mrs.POOJA JAIN
MdI	Md. Imran
VKS	Mr. Vikaram Singh
AV	Mr. Ankit Vijayvargiya
AS	Mr. Avdesh Sharma
AG	Mr. Abhishek Gupta

DA	Mrs. Deepti Arela
AB	Mr. Ajay Bhardwaj
JS	Mr. Jitendra Sharma
GK	Mr. Gaurav Kansal
YS	PJusuf Sharif
BB	Mrs. Baibhav Bishal
AN	Mr.Arun Nayak

(Time Table Coordinator)

(Head of Deptt.)

SWAMI KESHVANAND INSTITUTE OF TECHNOLOGY MANAGEMENT & GRAMOTHAN

GATE Students List (2016-17)

S. No.	University RollNo.	Name of Student
1	15ESKEE004	ADITYA SINGH TOMAR
2	15ESKEE005	AJAY JANGID
3	15ESKEE006	AJEET MEENA
4	15ESKEE007	AMIT KUMAR
5	15ESKEE008	ANIMESH SHARMA
6	15ESKEE009	ANISH KUMAR
7	15ESKEE010	ANISHA BANSAL
8	15ESKEE011	ANKITA SHARMA
9	15ESKEE012	ANURAG JINDAL
10	15ESKEE013	APURAV VAISHNAV
11	15ESKEE014	ARVIND CHOUDHARY
12	15ESKEE015	ARYAN GODARA
13	15ESKEE033	HARENDRA SINGH BAGHEL
14	15ESKEE034	HARSHITA BADLANI
15	15ESKEE035	HIMANK SHARMA
16	15ESKEE036	HIMMAT SINGH
17	15ESKEE037	HITESH KUMAR JAIN
18	15ESKEE038	HITESH MAINANI
19	15ESKEE039	ISHANT BHATIA
20	15ESKEE040	JAGMOHAN SAINI
21	15ESKEE041	JAIPRAKASH MENARIYA
22	15ESKEE042	JITENDER KUMAR
23	15ESKEE043	JYOTI YADAV
24	15ESKEE044	KAMAL KISHORE BHAKAR
25	15ESKEE045	KAMLESH KUMAR
26	15ESKEE046	KANISHKA MATHURIA
27	15ESKEE079	PRABHAT KUMAR
28	15ESKEE080	PRAMOD KUMAR
29	15ESKEE081	PRANSHU JAIN
30	15ESKEE082	PRASHANT GARG
31	15ESKEE083	PRASHANT GEHANI
32	15ESKEE085	PRAYAG
33	15ESKEE086	PRIYA KULHAR
34	15ESKEE087	PRIYA SHARMA
35	15ESKEE088	PRIYANSHU SHARMA
36	15ESKEE089	RAHUL AGARWAL
37	15ESKEE090	RAHUL CHOUDHARY
38	15ESKEE091	RAHUL MEHTA
39	15ESKEE099	SANGEETA MEENA
40	15ESKEE100	SANJAY KUMAR
41	15ESKEE101	SANTOSH KUMAR SHARMA
42	15ESKEE102	SHARAD SINGHAL
43	15ESKEE103	SHIVANI SINGHAL
44	15ESKEE104	SHSHANK MITTAL
45	15ESKEE105	SHUBHAM BHAMBHU

46	15ESKEE106	SHUBHAM SHARMA
47	15ESKEE107	SHUBHRA SINGH
48	15ESKEE108	SHWETA VYAS
49	15ESKEE109	SIMRAN SHARMA
50	15ESKEE110	SONU GURJAR
51	15ESKEE111	SUMIT TAILOR
52	15ESKEE112	SUNIL KUMAR SHARMA
53	15ESKEE113	SUSHIL KUMAR JOSHI
54	15ESKEE701	ABHISHEK AWASTHI
55	15ESKEE702	ADITYA K PESHWANI
56	15ESKEE703	ADITYA KUMAR MEHTA
57	15ESKEE704	AHTESHAM UR REHMAN NIAZI
58	15ESKEE705	AJAY SINGH KAJALA
59	15ESKEE706	AKSHAY JAIN
60	15ESKEE707	AKSHAY KUMAR PANCHOLI
61	15ESKEE708	AMIT KUMAR
62	15ESKEE709	ARPIT KAPOOR
63	15ESKEE710	ARUN KUMAR SAHU
64	15ESKEE734	PALAK JOSHI
65	15ESKEE735	PARTH JOSHI
66	15ESKEE736	PRATISHTHA HADA
67	15ESKEE737	PREETI LAWANIYA
68	15ESKEE738	PRITHVI SINGH SHEKHAWAT

Circuit Analysis
GATE Question

Swami Keshvanand Institute of Technology, Management & Gramothan, Jaipur
(Department of Electrical Engineering)

GATE Practice Questions (3EE4-05 Electrical Circuit Analysis)

1. If the charge accumulated on two parallel conductors charged to 12 V is 600 pC, what is the capacitance of the parallel conductors?
2. The current in a 2-mH inductor is i(t) = 2 sin 377t A Determine the voltage across the inductor and the energy stored in the inductor.
3. Compute the equivalent capacitance of the network in Fig

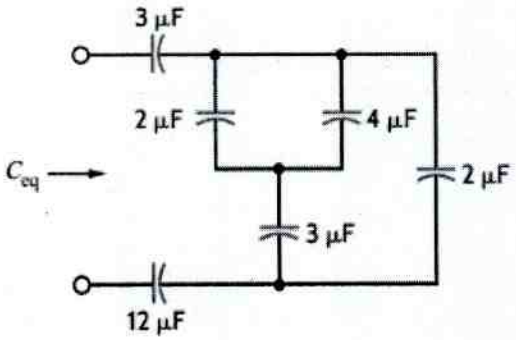

4. Find Laplace transform of

$$f(t) = \frac{1}{2}(t - 4e^{-2t}).$$

5. Find Laplace transform of

$$f(t) = e^{-4t}(t - e^{-t}).$$

6. Convert the following voltage functions to phasors.

$$v_1(t) = 12 \cos (377t - 425°) \text{ V}$$

$$v_2(t) = 18 \sin (2513t + 4.2°) \text{ V}$$

7. Convert the following phasors to the time domain if the frequency is 400 Hz.

$$\mathbf{V}_1 = 10\underline{/20°} \text{ V}$$

$$\mathbf{V}_2 = 12\underline{/-60°} \text{ V}$$

8. The voltage for the *a* phase of an *abc*-phase-sequence balanced wye-connected source is $\mathbf{V}_{an} = 120\underline{/90°}$ V rms. Determine the line voltages for this source.

9.

Compute the impedance $\mathbf{Z}_T$ in the network in Fig.

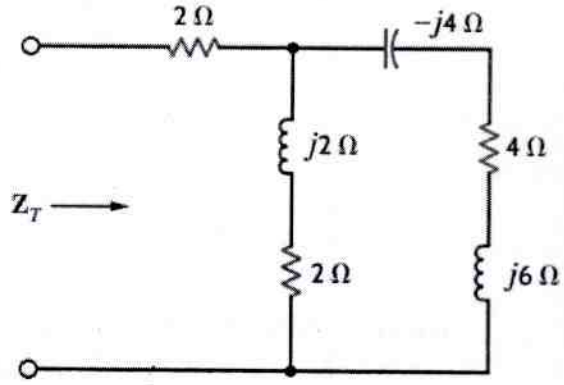

10.

Find $v(t)$ and $i(t)$ in the circuit shown in Fig

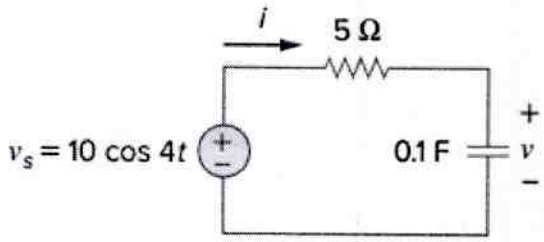

11. Determine the output voltage Vo in the circuit

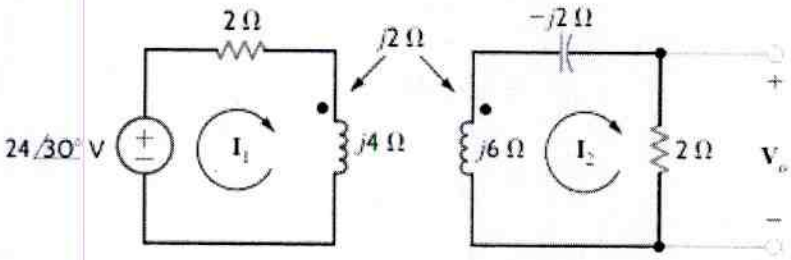

12.

Calculate the equivalent admittance $\mathbf{Y}_p$ for the network in and use it to determine the current **I** if $\mathbf{V}_S = 60\angle 45^\circ$ V.

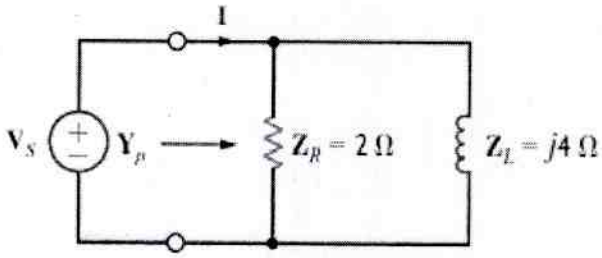

13. Draw the s-domain equivalent circuit of the given network and find the output voltage in both the s and time domains.

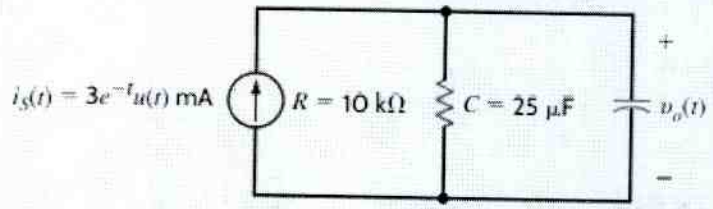

14. A three-phase wye-connected load is supplied by an abc-sequence balanced three-phase wye connected source with a phase voltage of 120 V rms. If the line impedance and load impedance per phase are **1 + j1 Ω** and **20 + j10 Ω**, respectively, determine the value of the line currents and the load voltages.

15.

The network in Fig. has the following parameters:

$$\mathbf{V}_S = 120\angle 0^\circ \text{ V}, \qquad G = 0.01 \text{ S},$$
$$C = 600\ \mu\text{F}, \quad \text{and} \quad L = 120 \text{ mH}$$

If the source operates at the resonant frequency of the network, compute all the branch currents.

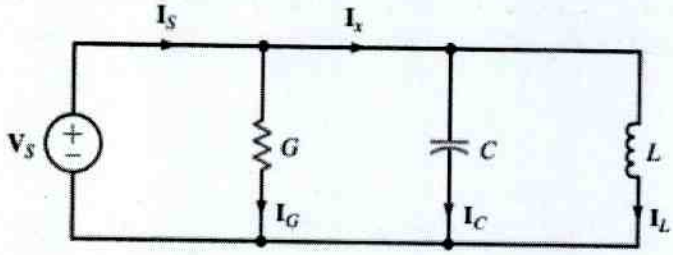

16. Determine the y parameters for the two-port shown in Fig.

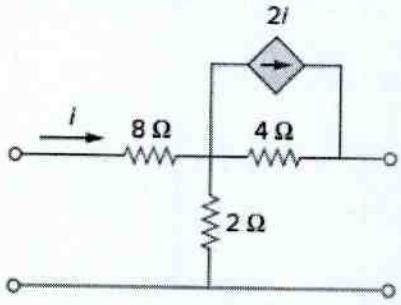

17. Determine the output voltage of the network shown in Fig. for t > 0.

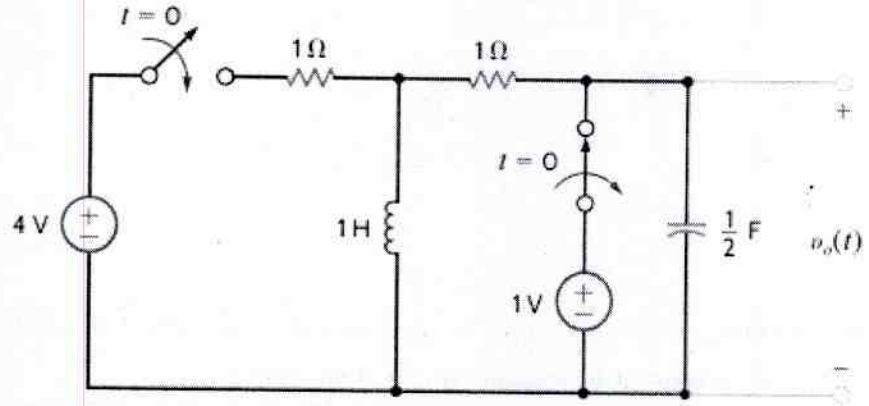

18.

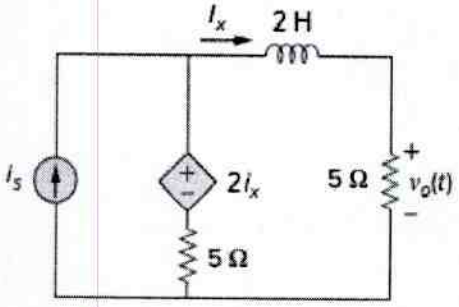

Assume that there is no initial energy stored in the circuit of Fig. at $t = 0$ and that $i_s = 10u(t)$ A. (a) Find $V_o(s)$ using Thevenin's theorem. (b) Apply the initial- and final-value theorems to find $v_o(0^+)$ and $v_o(\infty)$. (c) Determine $v_o(t)$.

Circuit Analysis

GATE Questions

Swami Keshvanand Institute of Technology, Management & Gramothan,
Ramnagaria, Jagatpura, Jaipur-302017, INDIA
Approved by AICTE, Ministry of HRD, Government of India
Recognized by UGC under Section 2(f) of the UGC Act, 1956
Tel. : +91-0141- 5160400 Fax: +91-0141-2759555
E-mail: info@skit.ac.in Web: www.skit.ac.in

Assignment – I :

(Q1) The current in an ideal conductor is plotted in the figure below. How much charge is transferred in the interval $0 < t < 6$ sec (in C)?

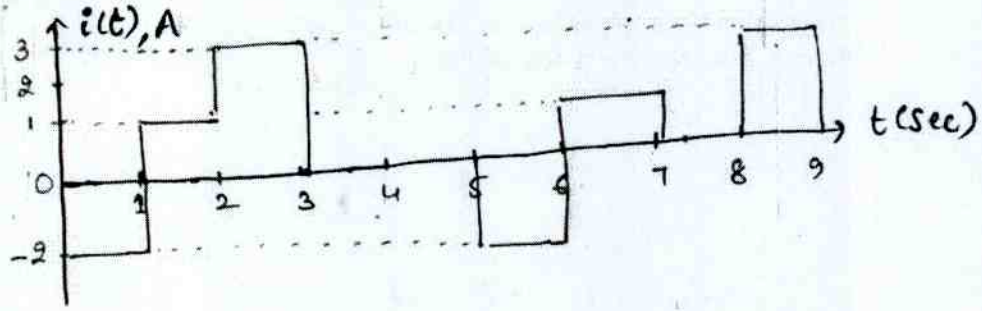

(Q2). An automobile battery is charged with a constant current of 4A. The terminal voltage of the battery is $v(t) = 10 + 2t$ V, where t is in hours. How much amount of energy (in kJ) is delivered to the battery during 3 hours.

(Q3) In the circuit shown in figure, voltage V_0 is ? _____ volts

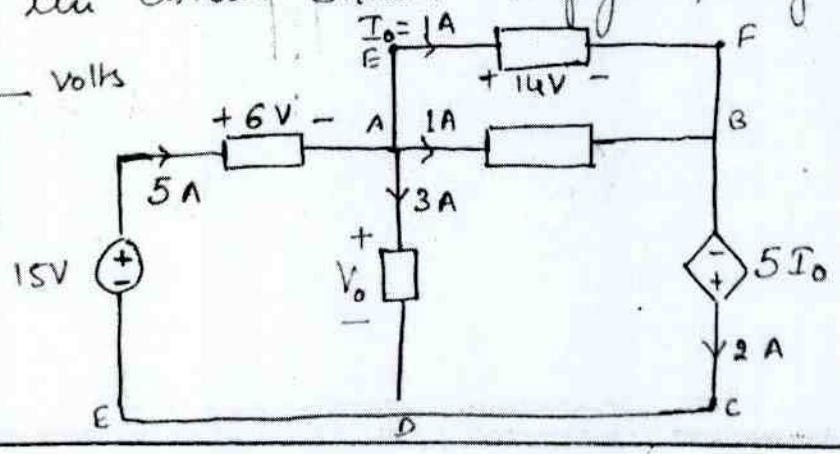

Swami Keshvanand Institute of Technology, Management & Gramothan,
Ramnagaria, Jagatpura, Jaipur-302017, INDIA
Approved by AICTE, Ministry of HRD, Government of India
Recognized by UGC under Section 2(f) of the UGC Act, 1956
Tel. : +91-0141- 5160400 Fax: +91-0141-2759555
E-mail: info@skit.ac.in Web: www.skit.ac.in

(Q4) The voltage source V_s in the figure.

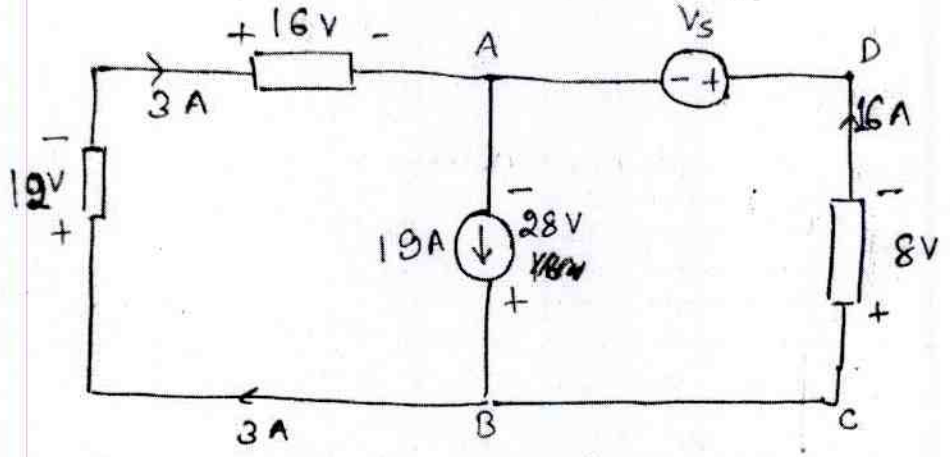

(a) Supplies 128 W
(b) absorbs 128 W
(c) absorbs 320 W
(d) Supplies 320 W

(Q5) In the circuit shown below, if dependent source supplies 16W of power, then the 24V source.

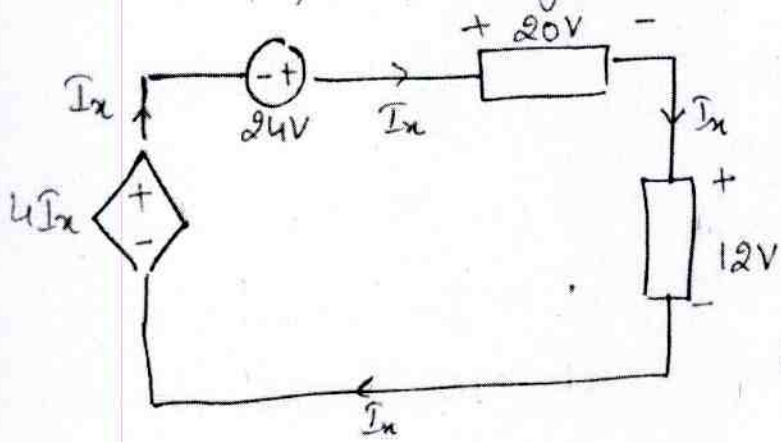

(a) Supplies 48W of power
(b) Absorbs 48 W of power
(c) Supplies 96W of power
(d) Absorbs 64W of power.

Circuit Analysis

GATE Question

Swami Keshvanand Institute of Technology, Management & Gramothan,
Ramnagaria, Jagatpura, Jaipur-302017, INDIA
Approved by AICTE, Ministry of HRD, Government of India
Recognized by UGC under Section 2(f) of the UGC Act, 1956
Tel. : +91-0141- 5160400 Fax: +91-0141-2759555
E-mail: info@skit.ac.in Web: www.skit.ac.in

Assignment :- 02

(Q1) The value of I_s in the following circuit is equal to ____ Amp.

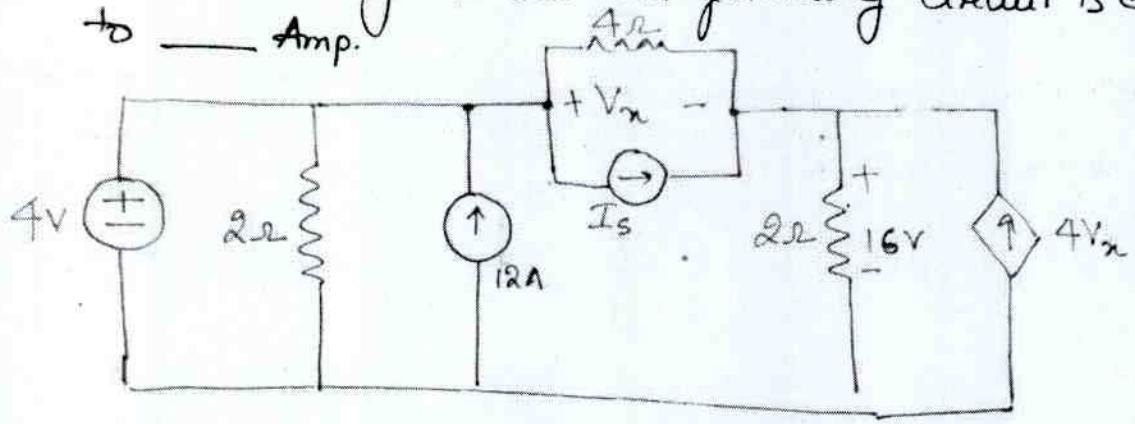

(Q2) In the following circuit, the value of R (in Ω) that is required to deliver a power of 160kW to the 16Ω resistor would be _____

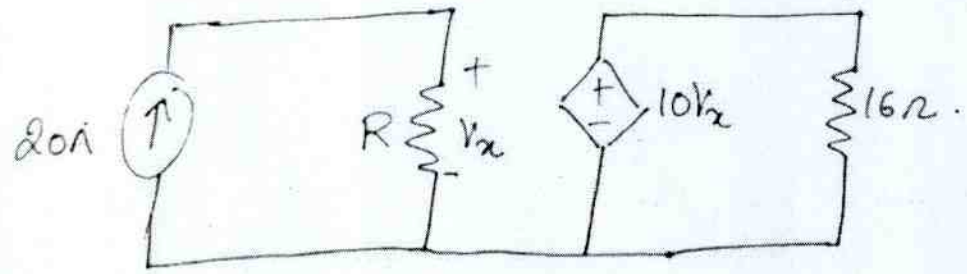

Swami Keshvanand Institute of Technology, Management & Gramothan,
Ramnagaria, Jagatpura, Jaipur-302017, INDIA
Approved by AICTE, Ministry of HRD, Government of India
Recognized by UGC under Section 2(f) of the UGC Act, 1956
Tel. : +91-0141- 5160400 Fax: +91-0141-2759555
E-mail: info@skit.ac.in Web: www.skit.ac.in

(Q3) In the given circuit Voltage V_s across Current Source is _____ Volts.

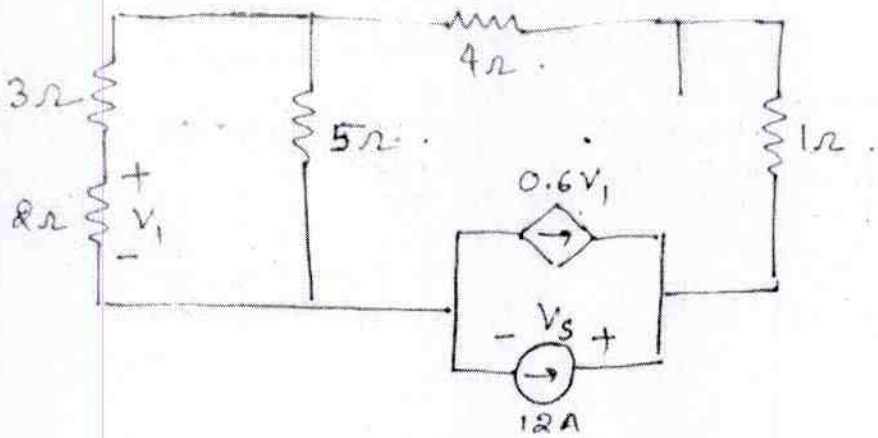

(Q4) The resistance 'Req' looking into terminal a-b in given circuit is _____ Ω.

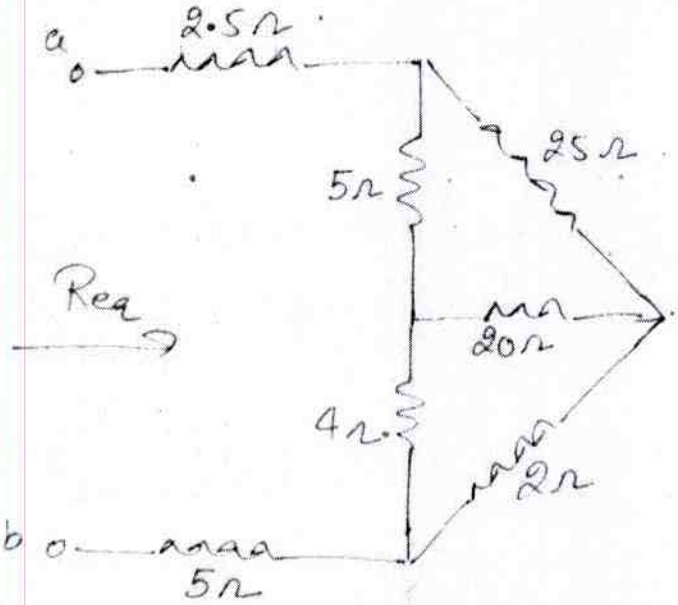

Swami Keshvanand Institute of Technology, Management & Gramothan,
Ramnagaria, Jagatpura, Jaipur-302017, INDIA
Approved by AICTE, Ministry of HRD, Government of India
Recognized by UGC under Section 2(f) of the UGC Act, 1956
Tel. : +91-0141- 5160400 Fax: +91-0141-2759555
E-mail: info@skit.ac.in Web: www.skit.ac.in

(Q5) The two electrical networks N_1 & N_2 are connected through three resistors as shown in figure. The voltage across 3Ω resistor is ____ volts.

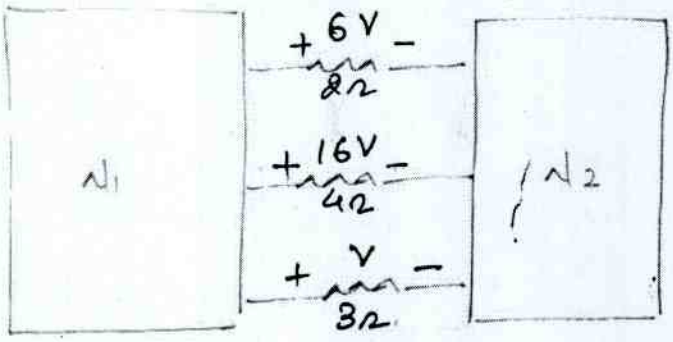

(Q6) Four voltages sources are connected in series as shown in figure. The resultant voltage between terminal a-b is ____

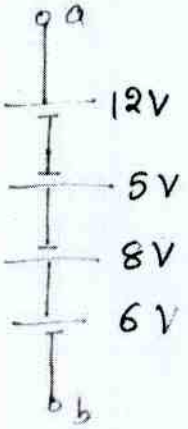

Swami Keshvanand Institute of Technology, Management & Gramothan,
Ramnagaria, Jagatpura, Jaipur-302017, INDIA
Approved by AICTE, Ministry of HRD, Government of India
Recognized by UGC under Section 2(f) of the UGC Act, 1956
Tel. : +91-0141- 5160400 Fax: +91-0141-2759555
E-mail: info@skit.ac.in Web: www.skit.ac.in

(Q7) In the circuit shown below voltage V_1 & V_2 are.

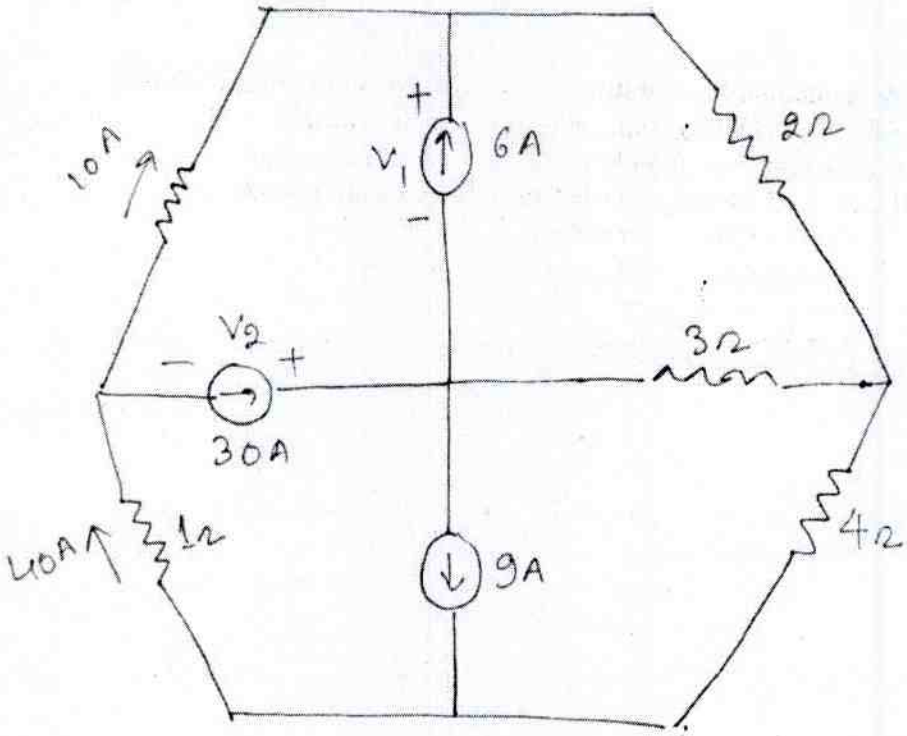

(Q8) What is the value of voltage V in the following circuit?

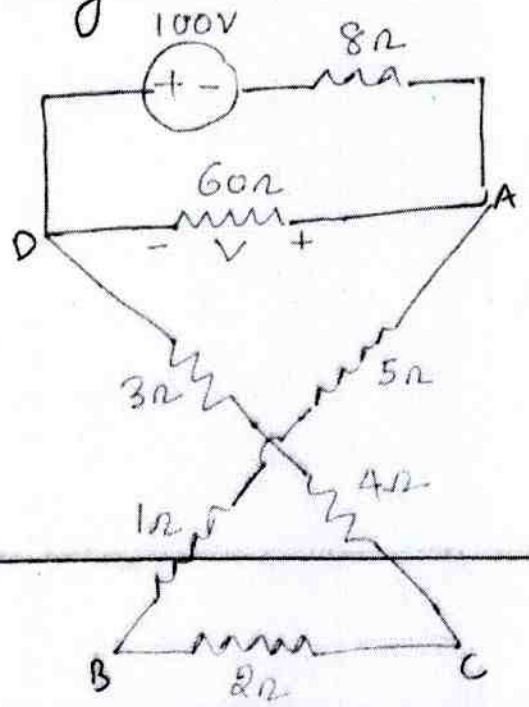

Circuit Analysis

GATE Questions

Swami Keshvanand Institute of Technology, Management & Gramothan,
Ramnagaria, Jagatpura, Jaipur-302017, INDIA
Approved by AICTE, Ministry of HRD, Government of India
Recognized by UGC under Section 2(f) of the UGC Act, 1956
Tel. : +91-0141- 5160400 Fax: +91-0141-2759555
E-mail: info@skit.ac.in Web: www.skit.ac.in

असतो मा सद्गमय

Assignment : 03

(Q) 1 Determine V_3 in the circuit figure.

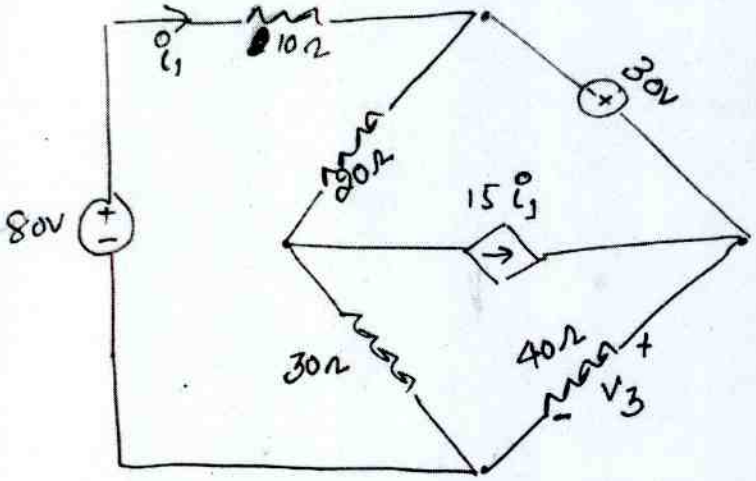

(Q2) In the circuit of figure, solve for I_1, I_2 & I_3.

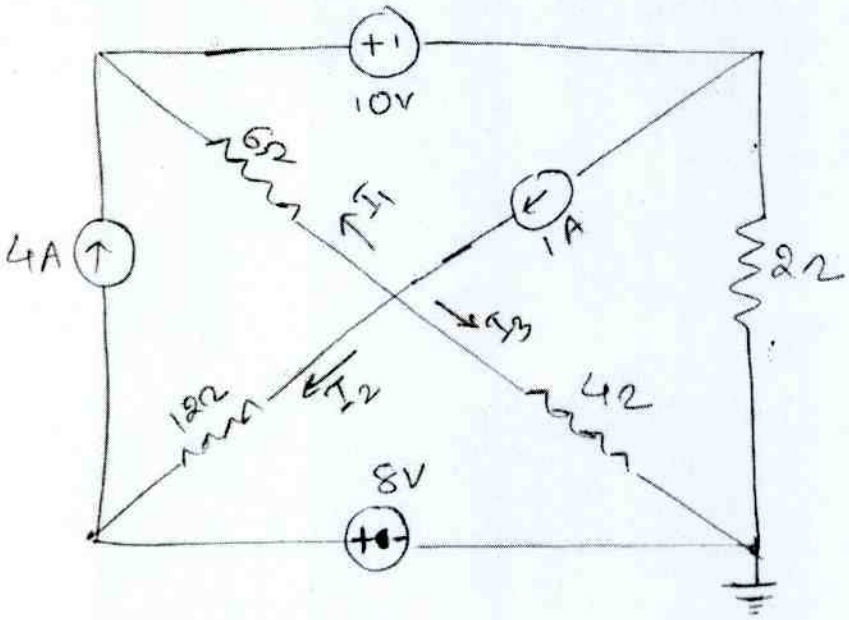

Swami Keshvanand Institute of Technology, Management & Gramothan,
Ramnagaria, Jagatpura, Jaipur-302017, INDIA
Approved by AICTE, Ministry of HRD, Government of India
Recognized by UGC under Section 2(f) of the UGC Act, 1956
Tel. : +91-0141- 5160400 Fax: +91-0141-2759555
E-mail: info@skit.ac.in Web: www.skit.ac.in

Q3 Determine the power dissipated by the 1Ω resistor.

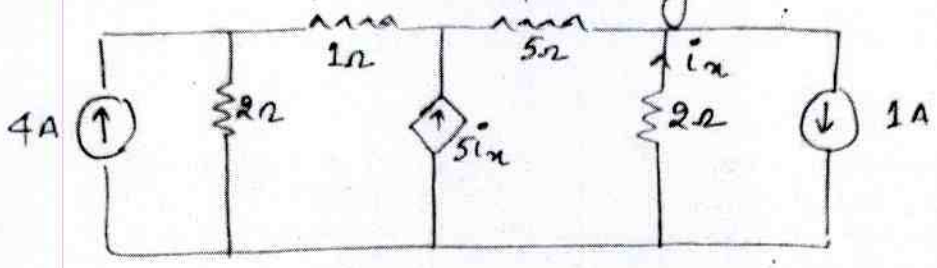

(Q4) The value of Voltage V_o in the following circuit is equal to

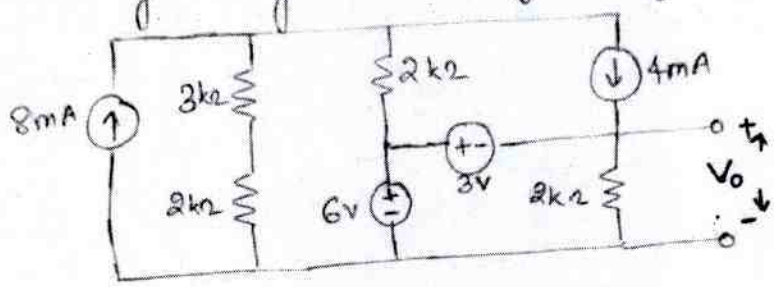

(Q5) In the following circuit the Voltage V_1 is ___ volts.

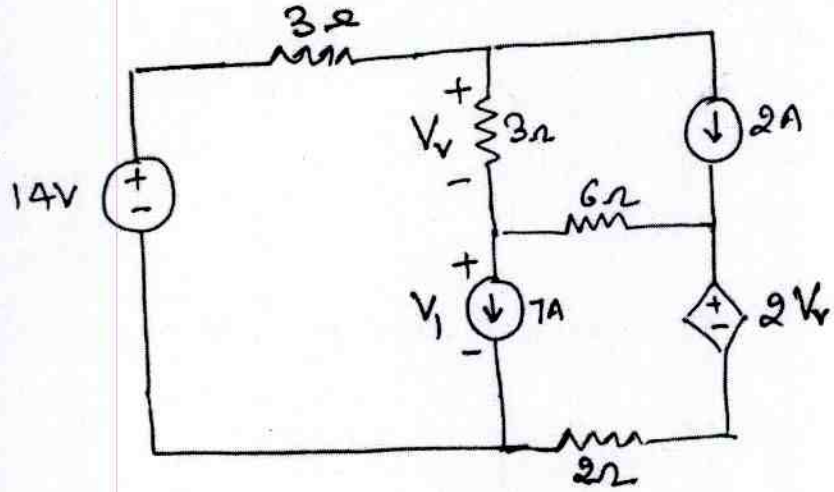

Swami Keshvanand Institute of Technology, Management & Gramothan,
Ramnagaria, Jagatpura, Jaipur-302017, INDIA
Approved by AICTE, Ministry of HRD, Government of India
Recognized by UGC under Section 2(f) of the UGC Act, 1956
Tel. : +91-0141- 5160400 Fax: +91-0141-2759555
E-mail: info@skit.ac.in Web: www.skit.ac.in

(Q6) Determine the node-to-reference voltages in the below circuit.

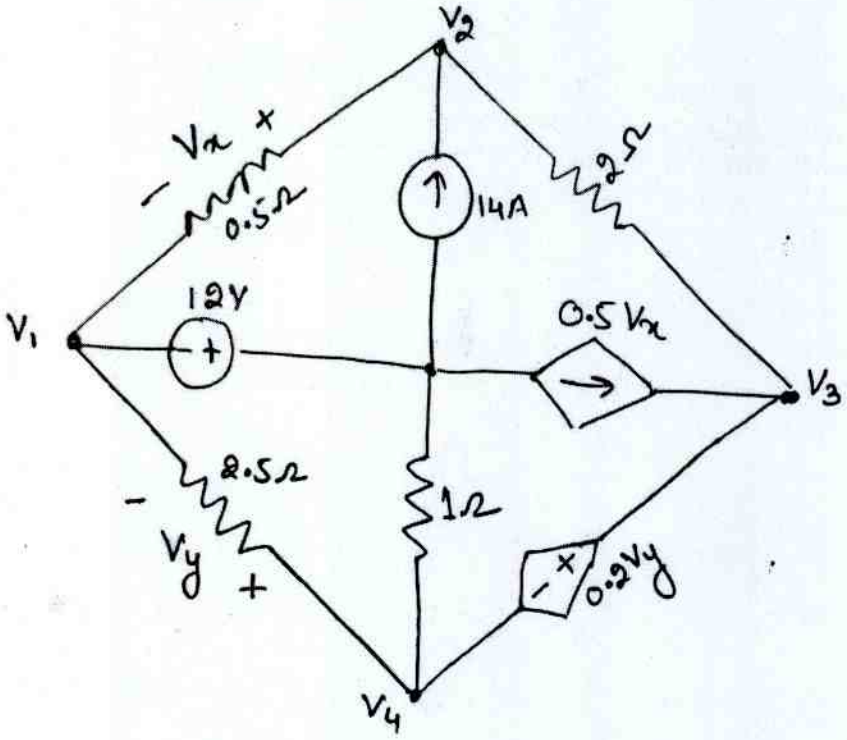

(Q7) Use Mesh Analysis to evaluate the three unknown currents in the circuit of below figure.

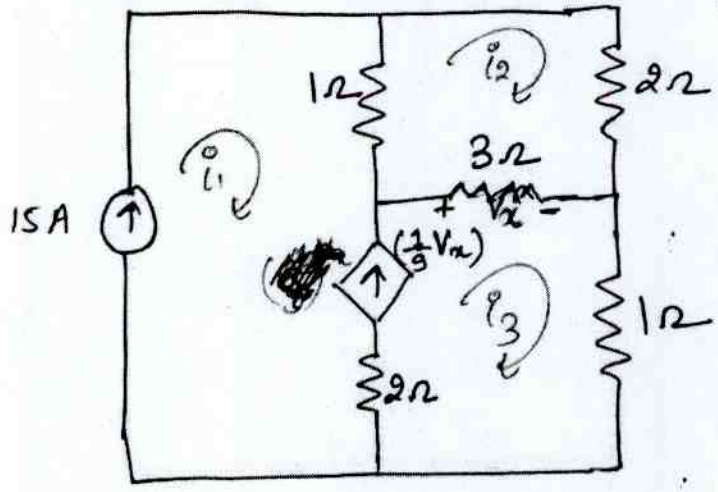

Swami Keshvanand Institute of Technology, Management & Gramothan,
Ramnagaria, Jagatpura, Jaipur-302017, INDIA
Approved by AICTE, Ministry of HRD, Government of India
Recognized by UGC under Section 2(f) of the UGC Act, 1956
Tel. : +91-0141- 5160400 Fax: +91-0141-2759555
E-mail: info@skit.ac.in Web: www.skit.ac.in

(Q8) Voltage V_S across the Current source is equal to

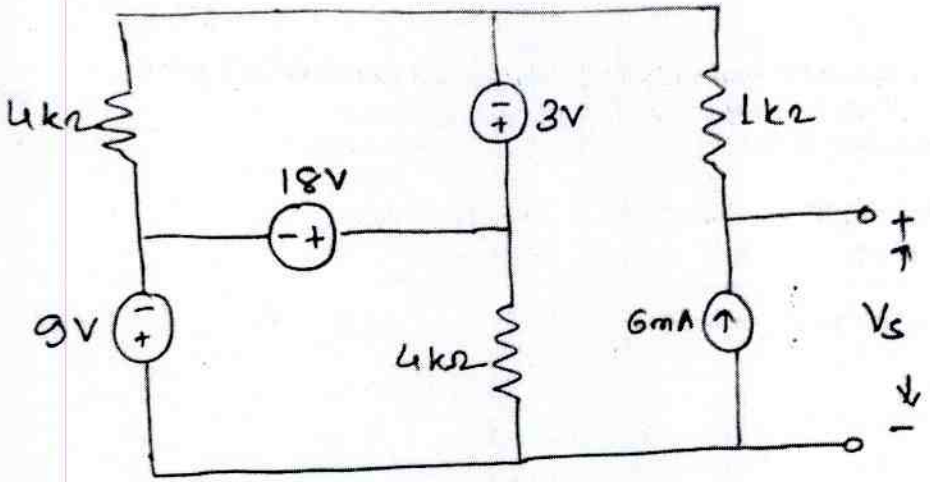

(Q9) Determine voltages V_1 through V_3 in the circuit of figure using nodal analysis

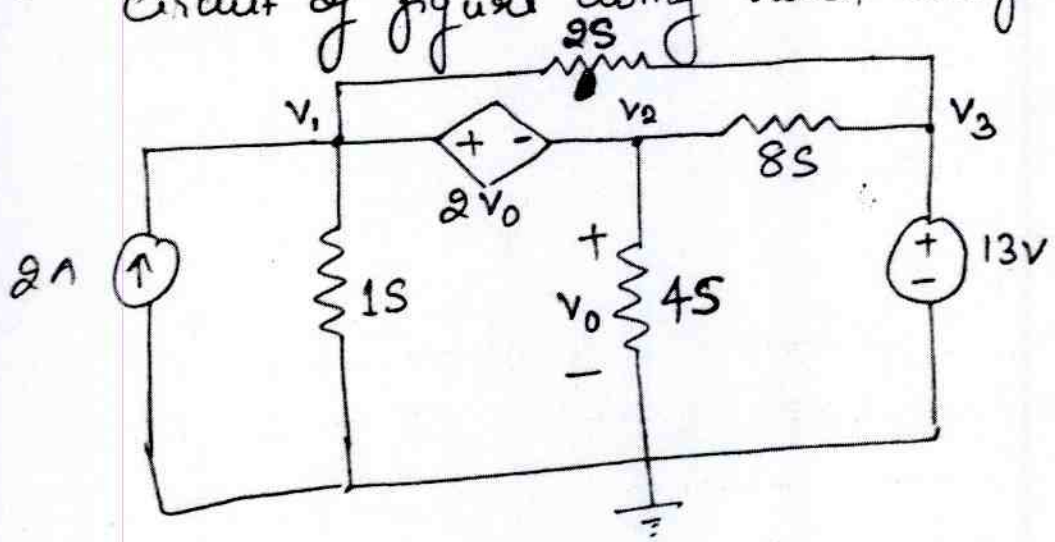

Circuit Analysis

GATE Questions

Swami Keshvanand Institute of Technology, Management & Gramothan,
Ramnagaria, Jagatpura, Jaipur-302017, INDIA
Approved by AICTE, Ministry of HRD, Government of India
Recognized by UGC under Section 2(f) of the UGC Act, 1956
Tel. : +91-0141- 5160400 Fax: +91-0141-2759555
E-mail: info@skit.ac.in Web: www.skit.ac.in

Assignment No. 4

(Q1) For the circuit in figure, find the Thevenin & Norton equivalent circuit at terminals 'a-b'

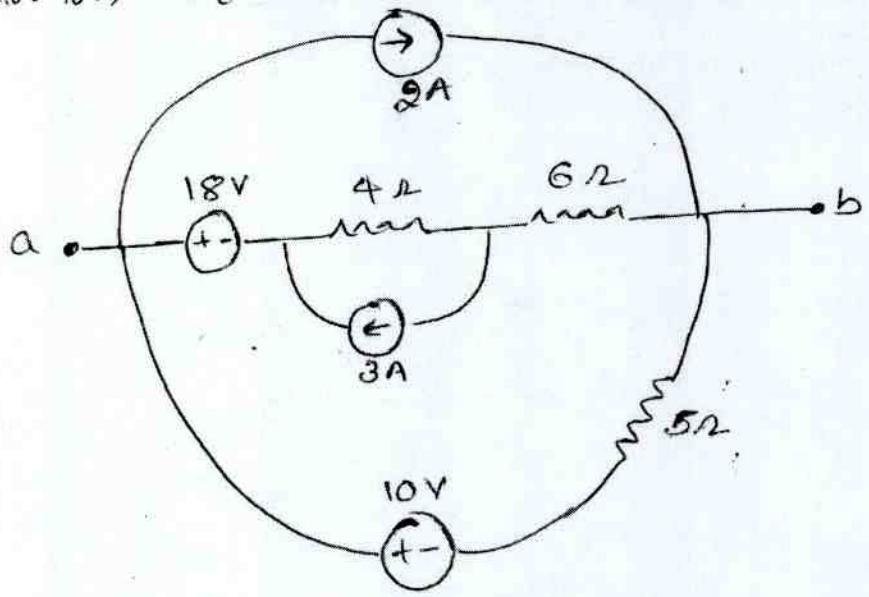

(Q2) Obtain the Norton equivalent at terminals a-b of the circuit in the figure.

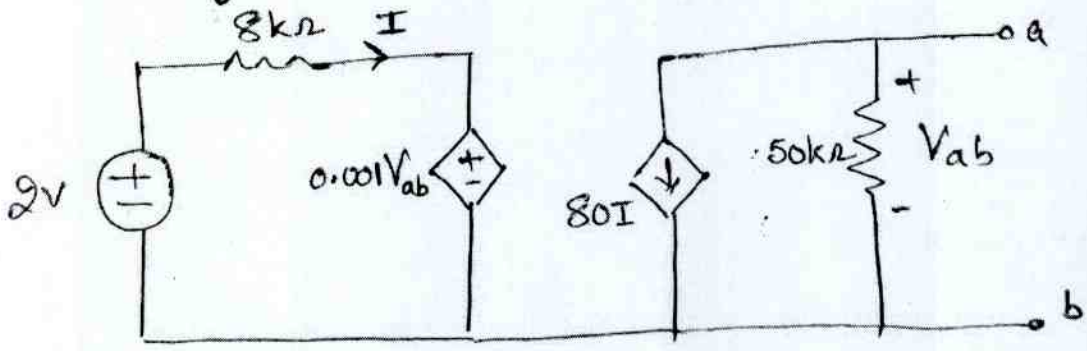

Swami Keshvanand Institute of Technology, Management & Gramothan,
Ramnagaria, Jagatpura, Jaipur-302017, INDIA
Approved by AICTE, Ministry of HRD, Government of India
Recognized by UGC under Section 2(f) of the UGC Act, 1956
Tel. : +91-0141- 5160400 Fax: +91-0141-2759555
E-mail: info@skit.ac.in Web: www.skit.ac.in

(Q3) For the circuit in figure, determine the value of 'R' such that the maximum power delivered to the load is 3 mW.

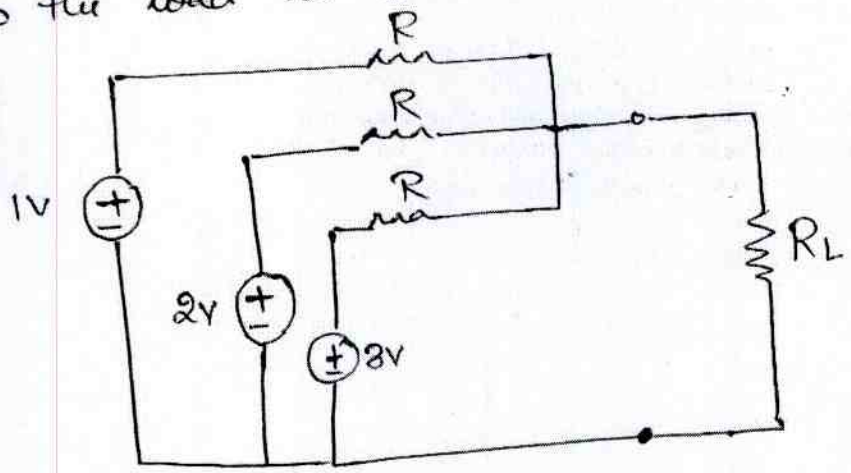

(Q4) A black box with a circuit in it is connected to a variable resistor. An ideal ammeter (with zero resistance) and an ideal voltmeter (with infinite resistance) are used to measure current & voltage as shown in figure. The result are shown in table.

(a) Find 'i' when $R = 4\Omega$

(b) Determine the maximum power from the box.

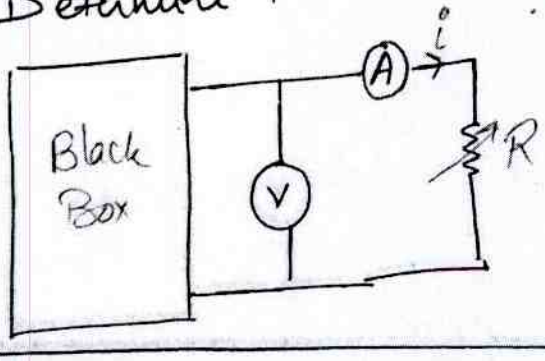

R(Ω)	V(V)	i(A)
2	3	1.5
8	8	1.0
14	10.5	0.75

Swami Keshvanand Institute of Technology, Management & Gramothan,
Ramnagaria, Jagatpura, Jaipur-302017, INDIA
Approved by AICTE, Ministry of HRD, Government of India
Recognized by UGC under Section 2(f) of the UGC Act, 1956
Tel. : +91-0141- 5160400 Fax: +91-0141-2759555
E-mail: info@skit.ac.in Web: www.skit.ac.in

(Q5) Employ superposition to determine the individual contribution from each independent source to the voltage 'V' as labeled in the circuit shown in figure.

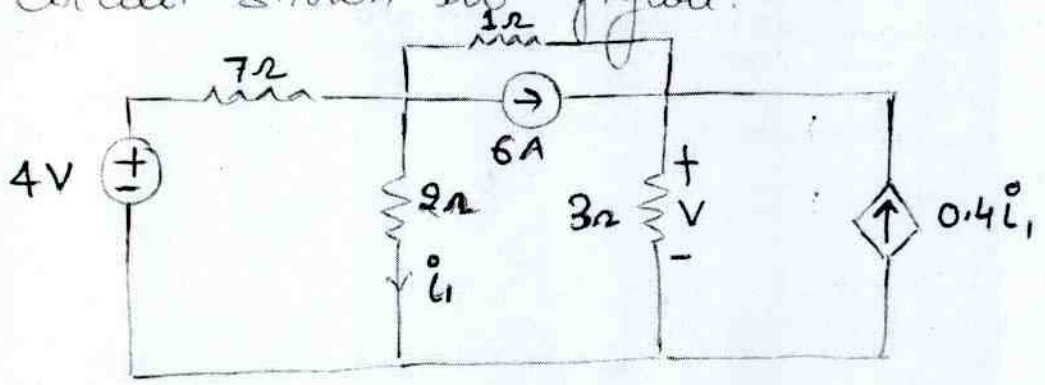

(Q6) Determine the Norton equivalent of the circuit drawn in figure as seen by terminals 'a' and 'b'

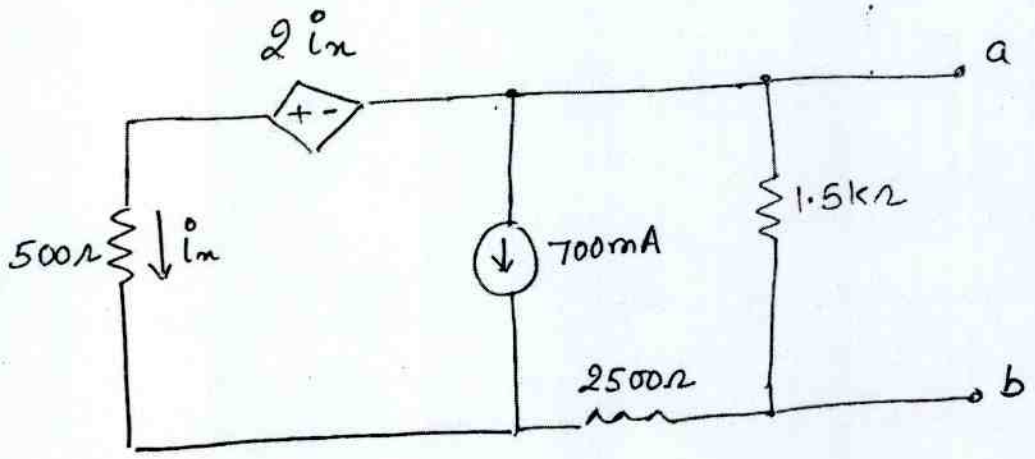

Swami Keshvanand Institute of Technology, Management & Gramothan,
Ramnagaria, Jagatpura, Jaipur-302017, INDIA
Approved by AICTE, Ministry of HRD, Government of India
Recognized by UGC under Section 2(f) of the UGC Act, 1956
Tel. : +91-0141- 5160400 Fax: +91-0141-2759555
E-mail: info@skit.ac.in Web: www.skit.ac.in

(Q11) In the circuit given in figure, $i_s(t) = 20\sin(2t)$ A the output voltage $V_o(t)$ is given by

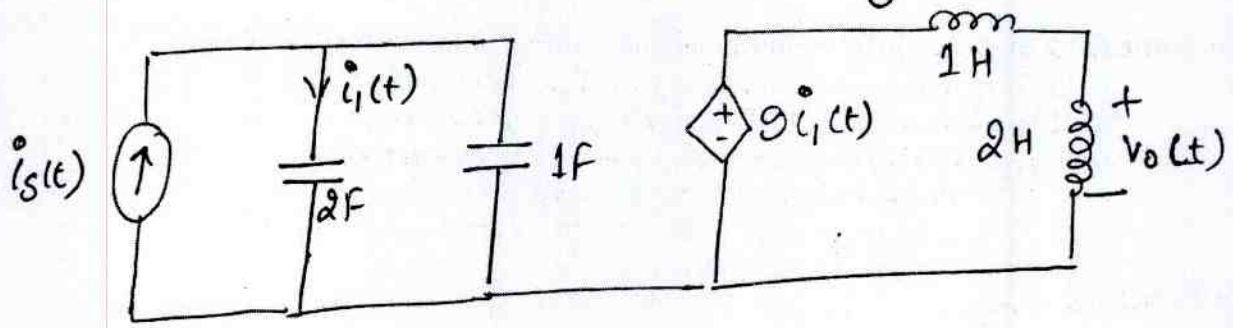

(Q12) For the circuit shown in figure, the equivalent capacitance seen at the terminal a-b is equal to ____ μF

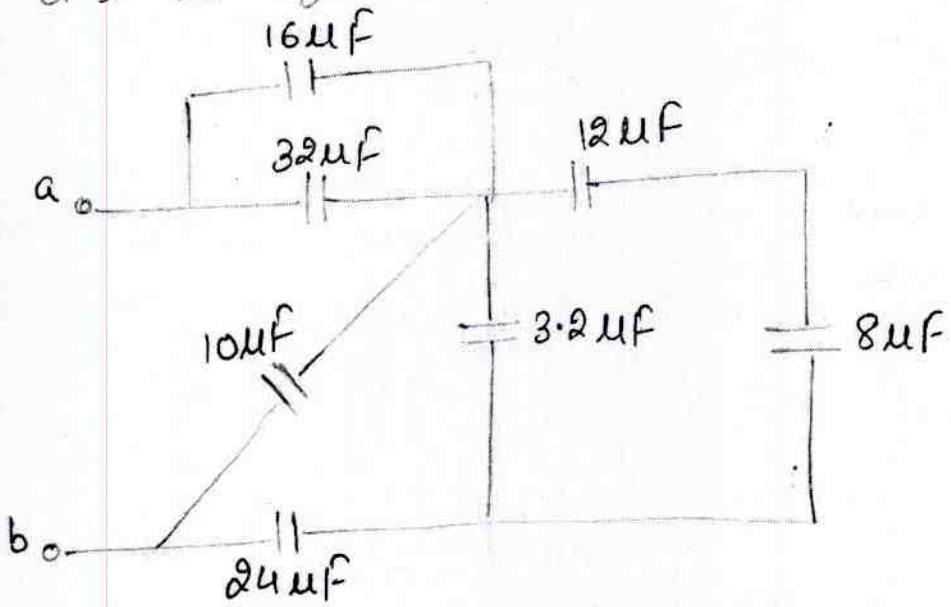

Swami Keshvanand Institute of Technology, Management & Gramothan,
Ramnagaria, Jagatpura, Jaipur-302017, INDIA
Approved by AICTE, Ministry of HRD, Government of India
Recognized by UGC under Section 2(f) of the UGC Act, 1956
Tel. : +91-0141- 5160400 Fax: +91-0141-2759555
E-mail: info@skit.ac.in Web: www.skit.ac.in

(07) Determine the Thevenin equivalent of the circuit in figure.

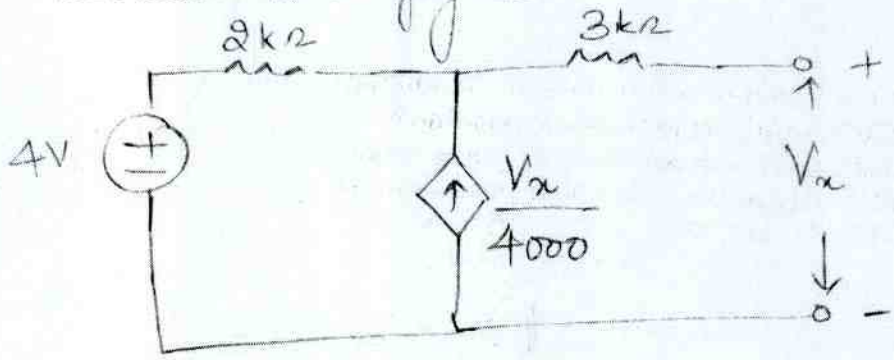

(08) Determine the Thevenin equivalent of the circuit in figure.

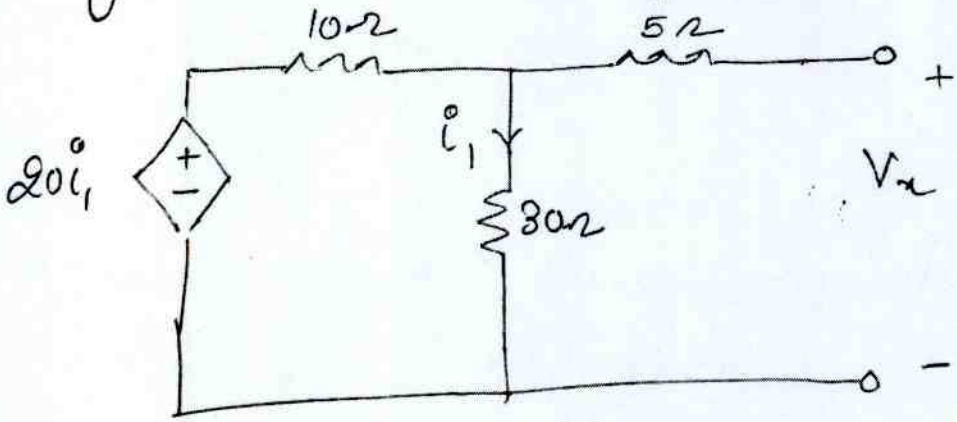

Swami Keshvanand Institute of Technology, Management & Gramothan,
Ramnagaria, Jagatpura, Jaipur-302017, INDIA
Approved by AICTE, Ministry of HRD, Government of India
Recognized by UGC under Section 2(f) of the UGC Act, 1956
Tel. : +91-0141- 5160400 Fax: +91-0141-2759555
E-mail: info@skit.ac.in Web: www.skit.ac.in

(Q3) For the circuit in figure, determine the value of 'R' such that the maximum power delivered to the load is 3 mW.

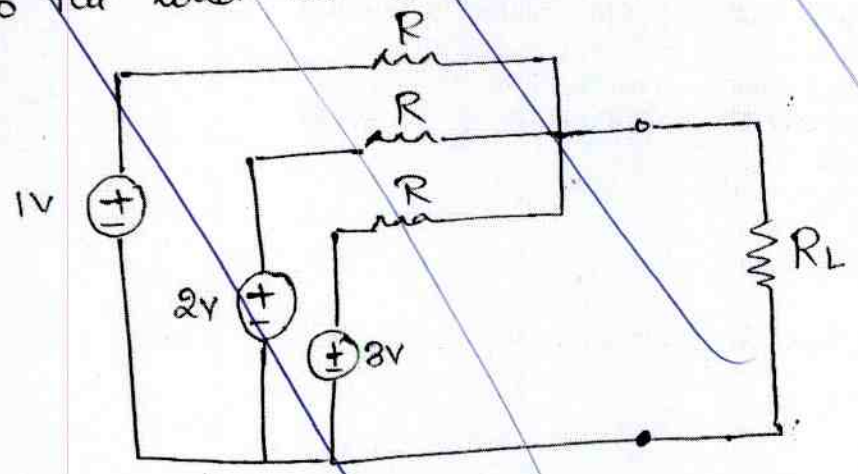

(Q4) A black box with a circuit in it is connected to a variable resistor. An ideal ammeter (with zero resistance) and an ideal voltmeter (with infinite resistance) are used to measure current & voltage as shown in figure. The result are shown in table.

(a) Find 'i' when $R = 4\Omega$

(b) Determine the maximum power from the box.

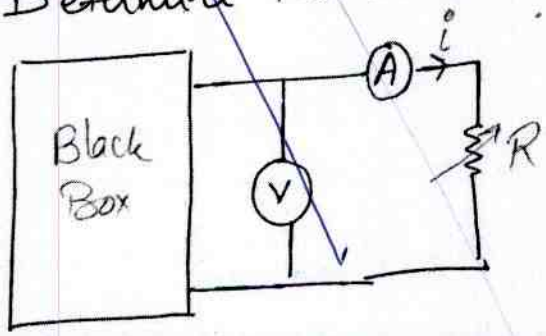

R(Ω)	V(V)	i(A)
2	3	1.5
8	8	1.0
14	10.5	0.75

Swami Keshvanand Institute of Technology, Management & Gramothan,
Ramnagaria, Jagatpura, Jaipur-302017, INDIA
Approved by AICTE, Ministry of HRD, Government of India
Recognized by UGC under Section 2(f) of the UGC Act, 1956
Tel. : +91-0141- 5160400 Fax: +91-0141-2759555
E-mail: info@skit.ac.in Web: www.skit.ac.in

(Q9) Find the voltage across the Capacitors in circuit of figure under DC conditions.

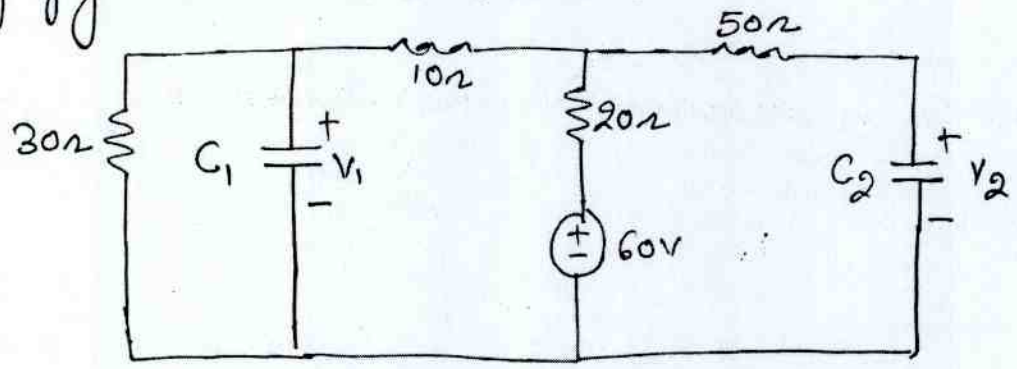

(Q10) In the circuit shown below, two series connected Capacitors of 3μF and 6μF having initial voltage of 4V and 6V are connected across a black box at $t=0$

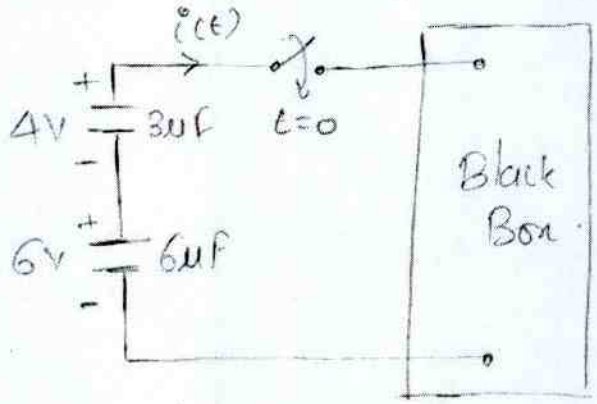

→ For $t \geq 0$, it is given that $i(t) = 20e^{-t}$ μA

(a) Total energy delivered to the black box will be _____ (in μJ)

(b) The energy trapped in the ideal capacitors will be _____ (in μJ)

SUB: EMFT

Tutorial Sheet - 2.

(previous year questions. IES & GATE).

Q.1 find the gradient of a scalar function of position V where $V(x,y,z) = x^2y + e^{z}$. Calculate the magnitude of gradient at point P.(1,5,-2).

Q.2. The Electric field is given by $\bar{E} = -\nabla V$ where V is the scalar field potential. If $V = r^2\phi - 2\theta$ in spherical coordinates. Calculate E.

Q.3 A closed surface is defined in spherical coordinates by $3 < r < 5$; $0.1\pi < \theta < 0.3\pi$ and $1.2\pi < \phi < 1.6\pi$. Calculate :

(I) the volume enclosed

(II) The total surface enclosing the volume.

Q.4. An Electric field at a point P, expressed in cylindrical coordinate system is given by

$$\bar{E} = 6r^2 \sin\phi \, \hat{a}_r + 2r^2 \cos\phi \, \hat{a}_\phi$$

find the value of divergence of the field if the location of point P is given by (5,5,5) in Cartesian system.

Q.5 find the curl of Vector $A = \left(\frac{e^{-r}}{r}\right) \hat{a}_\theta$

Q.6 find the nature of following fields by determining divergence and curl:

$$\bar{F} = 30\hat{a_x} + 2xy\,\hat{a_y} + 5xz^2\,\hat{a_z}$$

Q.7 A field $D = r^2 \cos^2\phi\,\hat{a_r} + z\sin\phi\,\hat{a_\phi}$ exists in the region $0 \le z \le 1$ and $r = 4$. Verify the divergence theorem for the configuration.

Q.8 Given $A = 2r\cos\phi\,\hat{a_r} + r\,\hat{a_\phi}$ in cylindrical coordinates. for the contour shown in figure verify stoke's theorem.

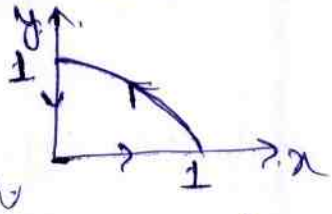

Q.9 Given a vector function

$$A = (x + C_1 z)\,\hat{a_x} + (C_2 x - 3z)\,\hat{a_y} + (x + C_3 y + C_4 z)\,\hat{a_z}$$

(a) Calculate the value of constants C_1, C_2, C_3 if A is irrotational.

(b) Determine the constant C_4 if A is solenoidal

Q.10 Given the vector

$$\bar{A} = (\cos x)(\sin y)\,\hat{a_x} + (\sin x)(\cos y)\,\hat{a_y}$$

where $\hat{a_x}, \hat{a_y}$ denote unit vectors along x, y directions, respectively. The magnitude of curl of $\bar{A}$ is.

(a) 0 (b) 1 (c) -1 (d) 2.

(previous year GATE Questions) SUB: EMFT

x, y, z.

Tutorial Sheet 1.

Q.1 A point is represented in cartesian coordinates as P (3, 4, 5) the radial component ρ in cylindrical coordinates will be.

(a) less than (b) greater than.

(c) equal to (d) unrelated to

r in spherical coordinates.

Q.2 Consider a closed surface S surrounding a volume V. If $\bar{r}$ is the position vector of a point inside S, with $\hat{n}$ the unit normal on S, the value of integral $\iint_S 2\bar{r}\cdot\hat{n}\, ds$ is

(a) 3V (b) 2V (c) 6V (d) 4V.

Q.3 Consider a vector $\bar{E} = z\hat{a_x} + (x+y)\hat{a_y}$, the z component of the vector in cylindrical coordinates will be

(a) z.

(b) $z\cos\phi + (x+y)\sin\phi$.

(c) $-z\sin\phi + (x+y)\cos\phi$

(d) Zero.

Q.4 Let a point in spherical and cylindrical coordinates are (r, θ, ϕ) and (ρ, ϕ, z). The radial component r in spherical coordinates is related to components in cylindrical coordinates as

(a) ρ (b) $\rho \cos\phi$.

(c) $z \tan^{-1}\phi$ (d) $(\rho^2 + z^2)^{1/2}$

Q.5 Consider points A, B, C and D on a circle of radius 2 units as in figure below. The items in list-II are the values of a_ϕ at different points on the circle. Match list-I with list-II and select the correct answer using the code given below the lists:

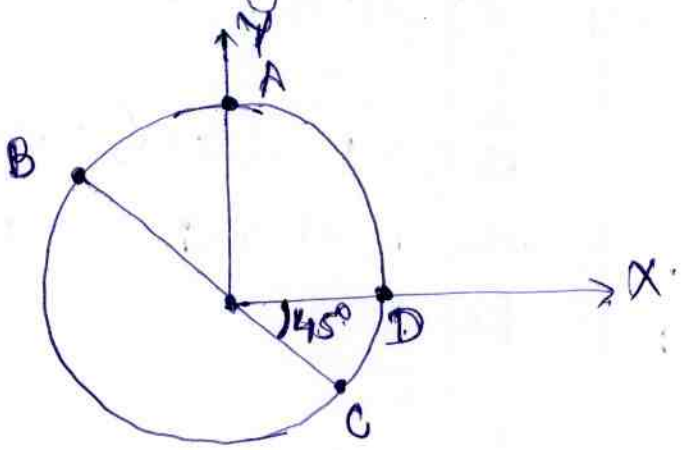

List-I	List-II
A.	1. $a_{\hat{x}}$
B.	2. $a_{\hat{y}}$
C.	3. $-a_{\hat{x}}$
D.	4. $(a_{\hat{x}} + a_{\hat{y}})/\sqrt{2}$
	5. $-(a_{\hat{x}} + a_{\hat{y}})/\sqrt{2}$
	6. $(a_{\hat{x}} - a_{\hat{y}})/\sqrt{2}$

Codes

	A	B	C	D
(a)	1	2	4	5
(b)	3	2	4	5
(c)	1	2	6	5
(d)	3	2	6	5

Codes:

	A	B	C	D.
(a)	3	4	5	2
(b)	1	6	5	2
(c)	1	6	2	4
(d)	3	5	4	2.

Q. 6 Given a vector field $\bar{A} = 2r\cos\phi\,\hat{a_\phi}$ in cylindrical coordinates. For the contour as shown below; $\oint \bar{A}\cdot d\bar{l}$ is

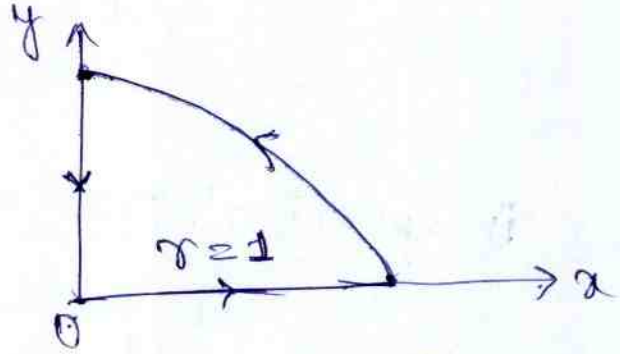

(a) 1 (b) $1-(\pi/2)$ (c) $1+(\pi/2)$ (d) -1.

Q.7

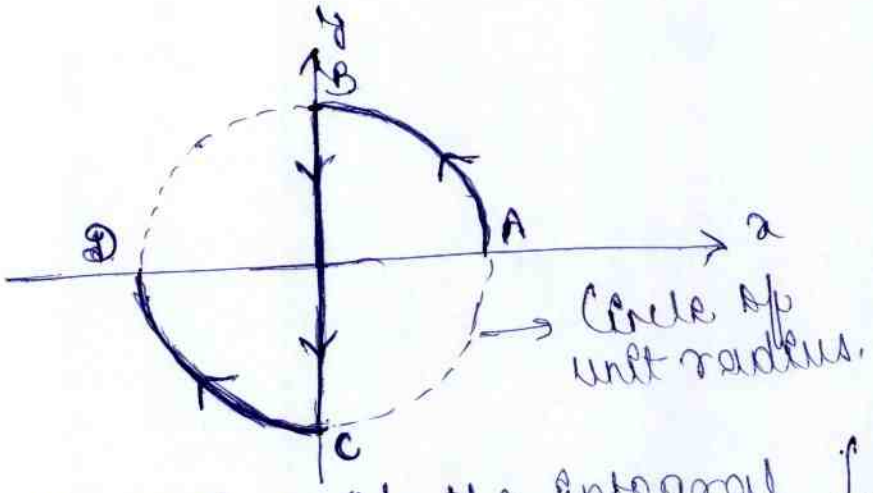

What is the value of the integral $\int_C d\bar{l}$ along the curve C (C is the curve ABCD in the dir. of arrow)?

(a) $\frac{2(a\hat{x}+a\hat{y})}{\sqrt{2}}$ (b) $-\frac{2(a\hat{x}+a\hat{y})}{\sqrt{2}}$ (c) $2a\hat{x}$ (d) $-2a\hat{x}$

Q.8 The volume of a cylinder that has radius a and length L is _____.

Q.9 If $\bar{A} = a\hat{\rho} + a\hat{\phi} + a\hat{z}$, the value of $\oint \bar{A} \cdot d\bar{l}$ around the closed circular quadrant shown in the given figure is _____.

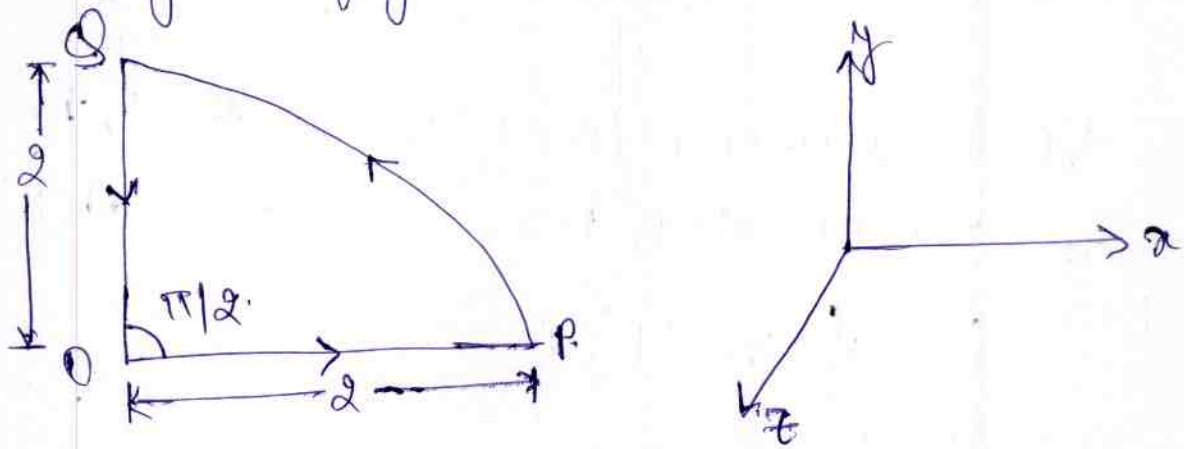

Q.10 The volume in spherical coordinate system is _____. If the parameters are

$1 \le r \le 2m$; $0 \le \theta \le \frac{\pi}{2}$; $0 \le \phi \le \frac{\pi}{2}$.

SWAMI KESHVANAND INSTITUTE OF TECHNOLOGY, M & G,
Jagatpura, Jaipur
Branch: Electrical Protection of Power System Semester: VII

MULTIPLE CHOICE QUESTIONS (GATE)

1. IDMT relays are used to protect the power transformers against

   (a) external short-circuits.

   (b) overloads.

   (c) internal short-circuits.

   (d) external short-circuits and overloads.

Ans: **D**

2. Which of the following relay is used to detect and protect internal fault of a transformer?

   (a) Differential relay.

   (b) Bucholoz relay.

   (c) IDMT relay.

   (d) Directional relay.

Ans: **B**

3. Which of the following relay is used for the generator phase to phase winding protection?

   (a) Differential relay.

   (b) Mho relay.

   (c) Distance relay.

   (d) Voltage balance relay.

Ans: **A**

4. Which of the following relay is used for anti-motoring Protection Scheme?

   (a) Reactance relay.

   (b) Reverse power relay.

   (c) Differential relay.

   (d) Offset mho relay.

Ans: **B**

5. Resistance switching in normally employed in

   (a) bulk oil breakers.

   (b) minimum oil breakers.

   (c) air blast circuit breaker.

   (d) SF6 circuit breaker

Ans: **C**

6. In overhead system, the relay used for feeder protection is

   (a) under-voltage relay.

   (b) IDMT relay.

   (c) Translay relay.

   (d) thermal relay.

Ans: **C**

7. The arc voltage in a circuit breaker is

   (a) in the phase with arc current..

   (b) lagging the arc current by 90°.

   (c) leading the arc current by 90°.

   (d) lagging the arc current by 180°.

Ans: **A**

8. What is the reactive power in AC operation?

   (a) Real power × sinφ.

   (b) Apparent power × sinφ.

   (c) Real power × cosφ.

   (d) Apparent power × cosφ.

Ans: **B**

9. The purpose of using series capacitor in a transmission lines is to

   (a) reduce inductance.

   (b) reduce line losses.

   (c) compensate voltage drop.

   (d) improve power factor.

Ans: **C**

10. Which of the following circuit breaker is design for the least operating voltage?

    (a) Vacuum circuit breaker.

    (b) Air circuit breaker.

    (c) SF6 circuit breaker.

    (d) Oil circuit breaker.

Ans: **B**

11. Which of the following circuit breaker is design for the highest operating voltage?

    (a) Vacuum circuit breaker.

    (b) Air blast circuit breaker.

    (c) SF6 circuit breaker.

    (d) Oil circuit breaker.

Ans: **B**

12. Which circuit breaker has high reliability and negligible maintenance?

    (a) Air blast circuit breaker.

    (b) Oil circuit breaker.

    (c) SF6 circuit breaker.

    (d) Vacuum circuit breaker.

Ans: **C**

13. The rating of a circuit breaker is usually determine on the basis of

(a) symmetrical fault.

(b) unsymmetrical fault.

(c) line to line fault.

(d) internal fault.

Ans: **C**

14. Chimney effect occurs in air blast circuit breaker

(a) air blast circuit breaker.

(b) SF6 circuit breaker.

(c) vacuum circuit breaker.

(d) oil circuit breaker.

Ans: **A**

15. The arc voltage in an AC circuit breaker is

(a) in phase opposition with the arc current.

(b) in phase with the arc current.

(c) lag arc current by 90°.

(d) lead arc current by 90°.

Ans: **B**

16. The nominal ratio for a current transformer is given by

a) (rated primary winding current)/(rated secondary winding current)
b) (number of turns in the primary winding)/(number of turns in the secondary winding)
c) (number of turns in the secondary winding)/(number of turns in the primary winding)
d) (rated secondary winding current)/(rated primary winding current)

Ans: **A**

17. Current transformers and potential transformers are used to increase the ranges of
    a) AC ammeter and AC voltmeter respectively
    b) AC ammeter and DC voltmeter respectively
    c) DC ammeter and DC voltmeter respectively
    d) DC ammeter and AC voltmeter respectively

Ans: **A**

18. The resistances of potential transformer winding is minimized by using
    a) Thick conductors and small length of turns
    b) Thin conductors and small length of turns
    c) Thin conductors and large length of turns
    d) Thick conductors and large length of turns

Ans: **A**

19. The potential transformers are used to measure large voltage using
    a) High range voltmeter
    b) Low range voltmeter
    c) High range ammeter
    d) Low range ammeter

Ans: **B**

20. Primary current in a current transformer is determined by
    a) The load on the system
    b) The load on its own secondary
    c) The load on its own primary
    d) All of these

Ans: **A**

21. The transformer ratio of the transformer depends upon the
    a) Exciting current
    b) Secondary current
    c) Power factor of secondary circuit
    d) All of these

Ans: **D**

22. For the measurement of energy and power it is essential to know
    a) Only the transformation ratio
    b) Phase angle between the primary and secondary currents
    c) Both (a) and (b)
    d) None of these

Ans: **C**

23. An impedance relay is used for
    a) Earth faults
    b) Interphase faults
    c) Both (a) and (b)
    d) None of these

    Ans: (c)

24. Relay gets its operating energy from

a) Transformer
b) Alternator
c) Overhead lines
d) C.T., P.T.
Ans: (d)

25. Good relay should possess

a) Speed & reliability
b) Aped & sensitivity
c) Adequateness & selectivity
d) All of these
Ans: (d)

26. Earthing transformer is used to
a) Improve neutral wire's current capacity
    b) Avoid overheating of transformer
    c) Provide artificial earthing
    d) Avoid harmonics
    Ans: (c)

27. Percentage differential protection is used to prevent against

a) Inter-turn faults
b) Heavy Loads
c) External Faults
d) Magnetizing current
Ans: (d)

28. Back up protection is needed for

a) Over voltage
b) Short circuits
c) Over current
d) All of these
Ans: (b)

29. An instantaneous relay is

a) Permanent moving magnet
b) Induction cup
c) Shaded pole
d) Moving coil
Ans: (a)

30. Relays for transmission line protection are

a) In three zones
b) In two zones
c) Independent of zone
d) None of these
Ans: (a)

31. Induction cup relays responds to
a) Current
b) Power
c) Voltage
d) Impedance
Ans: (d)

32. Split-phase relay responds to

a) Over load faults
b) Over voltage
c) Inter turn faults
d) All of these
Ans: (c)

33. A single phasing relay can be used with

a) 1ϕ motor
b) 2ʳ ϕ motor
c) 3 ϕ motor
d) All of these
Ans: (c)

34. A relay is used to
a) Break the fault current
b) Sense the fault
c) Sense the fault and direct to trip the circuit breaker
d) All of these
Ans: (c)

35. In impedance relay, current element torque should be

a) Equal to voltage element torque
b) Greater than voltage element torque
c) Less than voltage element torque
d) None of these
Ans: (a)

36. Over current fault is most likely in
a) Transformer
b) Overhead line equipment
c) Alternator
d) Motors
Ans: (b)

37. Plug setting of a relay can be changed by changing

a) Air gap
b) Back up stop
c) Number of ampere turns
d) All of these
Ans: (c)

38. Distance relays re generally

a) Impedance type
b) MHO type
c) Reactance type
d) All of these
Ans: (b)

39. Buchholz relay is used to protect against

a) Inter-turn fault
b) External faults
c) Rotor faults
d) Every internal faults
Ans: (d)

40. Instantaneous relay should operate within

a) 0.0001 sec
b) 0.001 sec
c) 0.01 sec
d) 0.1 sec
Ans: (c)

41. MHO relay is inherently a

a) Directional type
b) Non-directional type
c) Unidirectional type
d) None of these
Ans: (a)

42. Basic relay connection requirement is that the relay must operate for

a) Load
b) Internal faults
c) Both (a) and (b)
d) None of these
Ans: (b)

43. What is the purpose of back up protection?

a. To increase the speed

b. To increase the reach

c. To leave no blind spot

d. To guard against failure of primary

Ans: **d**

44. What is the actuating quantity for the relays?

a. Magnitude

b. Frequency

c. Phase angle

d. All of these

Ans: **d**

45. Protective relays can be designed to respond to _____

a. Light intensity, impedance

b. Temperature, resistance, reactance

c. Voltage and current

d. All of these

Ans: **d**

GATE 2018 Data *(Only 4th year students of all branches)*									
Institute Name:		Swami Keshvanand Institute of Technology, Management & Gramothan, Ramnagaria							
Sr. No.	Student Name	Branch	Registered in GATE (Yes/No)	Category	GATE Registration Number	Registration Fee Amount	Qualify Gate (Yes/No)	Marks Obtained	Aadhar No.
1	ASHOK KUMAR SAHU	C.E	YES	GEN	CE18S83043093	1500	YES	30.35	913907854799
2	CHANDRA PRAKASH	C.E	YES	GEN	CE18S83041792	1500	YES	44.09	696666198151
3	DEEPAK JANGIR	C.E	YES	OBC	CE18S73045095	1500	YES	37.22	669716064242
4	GOURAV BHADUKA	C.E	YES	GEN	CE18S83043470	1500	YES	35.57	733803183917
5	NARESH KUMAR TELI	C.E	YES	GEN	CE18S83043033	1500	YES	48.03	200625547447
6	PRIYANKA MEENA	C.E	YES	ST	CE18S73043512	750	YES	57.88	365620208447
7	SUMIT VERMA	C.E	YES	OBC	CE18S83042295	1500	YES	30.00	395493502711
8	TEJASVA MUDGAL	C.E	YES	GEN	CE18S73042174	1500	YES	45.68	306145021884
9	VIKAS SHARMA	C.E	YES	GEN	CE18S73042217	1500	YES	44.00	652247298301
10	YOGESH THAKRAL	C.E	YES	GEN	CE18S83041124	1500	YES	44.75	699473000756

Civil Department

SWAMI KESHVANAND INSTITUTE OF TECHNOLOGY, JAIPUR

DEPARTMENT OF CIVIL ENGINEERING

NOTICE regarding GATE section (2017-2018)

As discussed with Associate Prof. L.N.Dutt (HOD, CE), I would like to share some decisions that were being taken related to Gate section (Section-A) of III" and V semester.

1. All the faculties who are taking classes in GATE section will be prepare a tutorial sheet which will consist of minimum 10 questions that were being asked in the Competitive exams like GATE and IES.

2. Questions can be subjective or objective type. Also specify the year at the end of each question in which it was asked.

2. Faculties will mail this sheet to all the students.

3. One hardcopy of tutorial sheets will be submitted to the GATE Coordinator along with its answer key.

4. The tutorial sheet of each subject should be prepared and mailed weekly (preferably by Saturday of every week).

5. Students can ask their doubts and queries related to these sheets in the Library period assigned to them or in the last minutes of the lecture.

Concerned faculties: IIIrd Sem

S.No.	Faculty	Subject
1	DEEPAK AGARWAL	S.O.M-1
2	SURESH CHOUDHARY	F.M
3	SITARAM SAINI	S.O.M-II

Concerned faculties: Vth Sem

S.No.	Faculty	Subject
1	SITARAM SAINI	T.O.S-1
2	NEHA SHRIVASTVA	G.E-1

SITARAM SAINI
(GATE Coordinator)

Swami Keshvanand Institute of Technology, Management and Gramothan

Time Table for 3rd Semester Section A CIVIL Engineering Department (2017-18)

ABBREVIATIONS: L.N.D. – Lok Nath Datt M.M.S. – Manmohan Sharma V.V. – VIVEK VIJAY S.K. – SUNITI KUMARI TS – Tanu Sharma

Time/Day	8:00-9:00	9:00-10:00	10:00-11:00	11:00-11:30	11:30-12:30	12:30-1:30	1:30-2:30	2:30-3:30
MONDAY	Advanced Engineering Maths(L) (V.V.) 1F1	Civil Engineering Material (L) (MMS) 1F1	Soft Skills		Engineering Geology (L) (L.N.D.) 1F 1	Fluid Mechanics Lab (FM lab) (TS) Professional Ethics And Disaster Management (JBJ) survey lab Advanced Engg. Maths(T) (V.V.) Tutorial Room	Library	
TUESDAY	Engineering Geology Lab (S.K.) (Geology Lab) Building Drawing lab (M.M.S.) (Drawing Lab.) Civil Engineering Material Lab (SS1) (Concrete Lab) – mechanical workshop		Library Library		Strength of Materials I (L) (DA/SS) 1F1	Strength of Materials I (L) (DA/SS)1F1	Soft Skills	
WEDNESDAY	Advanced Engineering Maths(L) (V.V.) 1F1	Construction Technology(L) (S.S.1) 1F 1	Engineering Geology (L) (L.N.D.) 1F 1	B R E A K	Advanced Engg. Maths(T) (V.V.) Tutorial Room Fluid Mechanics Lab (FM lab) (TS) Professional Ethics And Disaster Management (JBJ) survey lab	Library	Fluid Mechanics (L) (SC/ShK) 1F1	Fluid Mechanics (L) (SC/ShK) 1F1
THURSDAY	Civil Engineering Material Lab (SS1) (Concrete Lab) – mechanical workshop Engineering Geology Lab (S.K.) (Geology Lab) Building Drawing I (M.M.S.) (Drawing Lab.)		Library Library		Advanced Engineering Maths(L) (V.V.) 1F1	Construction Technology(L) (S.S.1) 1F 1	Strength of Materials I(L) (DA/SS)1F1	
FRIDAY	Fluid Mechanics (L) (SC/ShK) 1F1	Fluid Mechanics (L) (SC/ShK) 1F1	Engineering Geology (L) (L.N.D.) 1F 1		Professional Ethics And Disaster Management (JBJ) survey lab Advanced Engg. Maths(T) (V.V.) Tutorial Room Fluid Mechanics Lab (FM lab) (TS)	Library	Civil Engineering Material (L) (MMS) 1F1	Construction Technology (L) (S.S.1) 1F 1
SATURDAY	Building Drawing lab (M.M.S.) (Drawing Lab.) Civil Engineering Material Lab (SS1) (Concrete Lab) – mechanical workshop Engineering Geology Lab (S.K.) (Geology Lab)		Library Library		Strength of Materials I (L) (DA/SS)1F1	Strength of Materials I (L) (DA/SS)1F1	Civil Engineering Material (L) (MMS) 1F1	

JBJ – Jitendra B. Jangid SS1 – Sandesh Saxena DA – Deepak Agarwal SC- Suresh Chaudhary

Swami Keshvanand Institute of Technology, Management and Gramothan

Priyanka Gupta & Suniti Kumari
Time – Table Coordinator
Civil Engineering Department

Swami Keshvanand Institute of Technology, Management and Gramothan

Time Table for 5th Semester Section A CIVIL Engineering Department (2017-18)

Time/Day	8:00-9:00	9:00-10:00	10:00-11:00	11:00-11:30	11:30-12:30	12:30-1:30	1:30-2:30	2:30-3:30
MONDAY	Surveying Lab-II (SKM) Survey Lab				Solid Waste Management (L) (TS) 1F2	Surveying-II (L) (SKM) 1F2	Building Design (L) (S.S1.) 1F2	
	Computer Aided Building Design (AG) Computer Lab							
	Geotechnical Engg. Lab.-I (NS1) Geotechnical Engg. Lab		Geotechnical Engineering – I (TUT) (NS1) 1F2					
TUESDAY	Theory of Structures-I (L) (S.S) 1F1	Geotechnical Engineering – I (L) (NS1) 1F 1	Environmental Engineering– I (L) (AS1) 1F1		CAMPUS RECRUITMENT TRAINING PROGRAMME 2F2 (DS)		Environmental Engg. Lab. I(AS1) Environmental Engg. Lab	
							Structural Engineering Lab(AJ) Stuctural Engg. Lab	
							Theory of Structures-I(TUT) (S.S) Tutorial Room	
WEDNESDAY	Geotechnical Engg. Lab.-I (NS1) Geotechnical Engg. Lab		Geotechnical Engineering – I (TUT) (NS1) 1F2	B R E A K	Building Design (L) (S.S1.) 1F3	Surveying-II (L) (SKM) 1F3	Environmental Engineering– I (L) (AS1) 1F3	
	Surveying Lab-II (SKM) Survey Lab							
	Computer Aided Building Design (AG) Computer Lab							
THURSDAY	Theory of Structures-I (L) (S.S) 1F2	Geotechnical Engineering – I (L) (NS1) 1F 2	Environmental Engineering– I (L) (AS1) 1F2		CAMPUS RECRUITMENT TRAINING PROGRAMME 2F2 (DS)		Theory of Structures-I(TUT) (S.S) Tutorial Room	
							Environmental Engg. Lab. I(AS1) Environmental Engg. Lab	
							Structural Engineering Lab(AJ) Stuctural Engg. Lab	
FRIDAY	Computer Aided Building Design (AG) Computer Lab				Building Design (L) (S.S1.) 1F3	Surveying-II (L) (SKM) 1F3	Solid Waste Management (L) (TS) 1F3	
	Geotechnical Engg. Lab.-I (NS1) Geotechnical Engg. Lab		Geotechnical Engineering – I (TUT) (NS1) 1F2					
	Surveying Lab-II (SKM) Survey Lab							
SATURDAY	Theory of Structures-I (L) (S.S) 1F2	Geotechnical Engineering – I (L) (NS1) 1F 2	Solid Waste Management (L) (TS) 1F3		CAMPUS RECRUITMENT TRAINING PROGRAMME 2F2 (DS)		Structural Engineering Lab(AJ) Stuctural Engg. Lab	
							Theory of Structures-I(TUT) (S.S) Tutorial Room	
							Environmental Engg. Lab. I(AS1) Environmental Engg. Lab	

Abbreviations: SKM – Saurabh Kumar Meena, A.G. – Ajay Gautam, NS1 – Dr. Neha Shrivastava, SS1 – Sandesh Saxena, TS– Tanu Sharma, SS– Sitaram Saini, AS1- Ashish Sharma, AJ – Akash Johari, DS- Deepak Sharma

PRIYANKA GUPTA & SUNITI KUMARI
TIMETABLE COORDINATOR
CIVIL ENGINEERING DEPARTMENT

Swami Keshvanand Institute of Technology, Management & Gramothan

Ramnagaria, Jagatpura, Jaipur-17

V SEM (III YEAR) : A + B | Session: 2018-19

B. Tech. (Civil Engineering)

Section-A			Section-B		
S. No.	RTU ROLL NO	NAME OF STUDENT	S. No.	RTU ROLL NO	NAME OF STUDENT
1	16ESKCE001	AADITYA SINGH YADAV	1	16ESKCE073	OMKAR GUNJAL
2	16ESKCE002	AAYUSH AGRAWAL	2	16ESKCE074	PANKAJ KUMAR YADAV
3	16ESKCE003	ABHAY MEENA	3	16ESKCE075	PANKAJ SAINI
4	16ESKCE004	ABHIJEET MEENA	4	16ESKCE076	PARNIKA SHARMA
5	16ESKCE005	ABHISHEK KHEDIA	5	16ESKCE077	PIYUSH MATHUR
6	16ESKCE006	AISHWARYA SHARMA	6	16ESKCE078	PRAHLAD MALI
7	16ESKCE007	AJAY GUPTA	7	16ESKCE079	PRANAV LOHIA
8	16ESKCE008	AKSHAT JHARWAL	8	16ESKCE080	PRANJAL JAIN
9	16ESKCE009	AKSHIT SHARMA	9	16ESKCE081	PRASANG SUNARIYA
10	16ESKCE010	ALOK MATHUR	10	16ESKCE082	PRATIK KHATRI
11	16ESKCE011	AMAN KUMAR	11	16ESKCE083	PRAVEEN GUSAINWAL
12	16ESKCE013	AMAN PICHUNIA	12	16ESKCE084	PREM RAAZ
13	16ESKCE014	AMAN SHARMA	13	16ESKCE085	PRIYANKA
14	16ESKCE015	AMAN SHARMA	14	16ESKCE086	PULKIT
15	16ESKCE016	AMAN SINGH CHAUHAN	15	16ESKCE087	RADHIKA GAUR
16	16ESKCE018	ANANT KUMAR NAGAR	16	16ESKCE088	RAHUL KUMAR GARG
17	16ESKCE019	ANKUL KUMAR MEENA	17	16ESKCE089	RAHUL SINGH
18	16ESKCE020	ANUJ MEENA	18	16ESKCE090	RAJAT SAINI
19	16ESKCE021	ARCK JAIN	19	16ESKCE091	RAJAT SHARMA
20	16ESKCE022	ASHISH GOYAL	20	16ESKCE092	RAJESH KUMAR
21	16ESKCE023	ASHUTOSH MEENA	21	16ESKCE093	RAJESH MEENA
22	16ESKCE024	AYUSH SAINI	22	16ESKCE094	RAVI BOYAL
23	16ESKCE026	BIJENDRA KUMAR SINGH	23	16ESKCE095	RAVI SHEKHAR
24	16ESKCE028	CHIRAG JAIN	24	16ESKCE096	RAVIKANT BAIRWA
25	16ESKCE029	DEEKSHA SWAMI	25	16ESKCE097	RISHABH KAROL
26	16ESKCE030	DEEPANSHU GUPTA	26	16ESKCE098	RISHI P MEENA
27	16ESKCE031	DEEPNARAYAN PAREWA	27	16ESKCE099	RITIK MEENA
28	16ESKCE032	DESHANK SHARMA	28	16ESKCE100	SALMAN KHAN NOHARY
29	16ESKCE033	DEV SINGH NATHAWAT	29	16ESKCE101	SAMAKSH SAXENA
30	16ESKCE034	DHANNJAY POONIA	30	16ESKCE102	SANCHAY REWAR
31	16ESKCE035	DIVYANSH GAUTAM	31	16ESKCE103	SARVESH JAIN
32	16ESKCE036	FARAZ KHAN	32	16ESKCE105	SHAILJA SEHRA
33	16ESKCE037	GARVIT GOYAL	33	16ESKCE106	SHANU KUMAR
34	16ESKCE039	HARSHIT JAIN	34	16ESKCE107	SHEIKH NAYEEM
35	16ESKCE040	HEENA CHOUDHARY	35	16ESKCE108	SHER SINGH CHOUDHARY
36	16ESKCE041	HEMCHANDRA KUMAR	36	16ESKCE109	SHUBHAM GOYAL
37	16ESKCE042	HIMMAT SINGH TANWAR	37	16ESKCE110	SOURABH GOAD
38	16ESKCE043	HITESH KUMAR ARYA	38	16ESKCE111	SOURBHENDRA DEV SHARMA
39	16ESKCE044	ISHAN	39	16ESKCE112	SUBHANSHU SHARMA
40	16ESKCE045	JAI PRAKASH KUMAWAT	40	16ESKCE113	SUMIT KUMAR
41	16ESKCE046	JAIVEER SINGH	41	16ESKCE114	SUNIL CHANDEL
42	16ESKCE047	JYOTI	42	16ESKCE115	SURAJ KUMAR KUMAWAT
43	16ESKCE048	KAPIL KUMAR	43	16ESKCE116	TANVI KALAL
44	16ESKCE049	KOMAL SAINI	44	16ESKCE117	TARUN MATHUR
45	16ESKCE050	KOUSAR KHAN	45	16ESKCE118	UMESH CHAND MEENA
46	16ESKCE051	KULDEEP SINGH RANIWAL	46	16ESKCE119	VARTIKA SWARNKAR
47	16ESKCE052	KUSH DADHICH	47	16ESKCE120	VEDANG KUMAR TRIVEDI
48	16ESKCE053	LAKSHIT JOSHI	48	16ESKCE121	VIJAY KUMAR MEENA
49	16ESKCE054	LOKESH BHADU	49	16ESKCE122	VINAY MATHODIYA
50	16ESKCE055	MAHESH CHOUDHARY	50	16ESKCE123	VISHAL KAWALIA
51	16ESKCE056	MANISH SONI	51	16ESKCE124	VISHAL SINGH BAGHEL

52	16ESKCE057	MEENA KHORWAL
53	16ESKCE059	MOHD ZAID KHAN
54	16ESKCE060	MOHIT MEENA
55	16ESKCE061	MOHIT YADAV
56	16ESKCE062	MRIDUL SAVARIYA
57	16ESKCE063	MUKTA SOLANKI
58	16ESKCE064	NARESH KUMAR
59	16ESKCE065	NAVNEET SINGH
60	16ESKCE066	NEERAJ JANGID
61	16ESKCE067	NEHA MEENA
62	16ESKCE068	NIDHI RAMAWAT
63	16ESKCE069	NIKHIL KHANDELWAL
64	16ESKCE070	NISHA
65	16ESKCE072	OMENDRA PAL SHEKHAWAT

52	16ESKCE125	YOGESH PARASHAR
53	16ESKCE126	YOGESH SINGH ETHANI
54	16ESKCE300	RAJAT GAUTTAM
55	16ESKCE301	VIKASH KUMAR
56	16ESKCE302	SHUBHAM MITTAL
57	17ESKCE201	Kuber Bhatnagar
58	17ESKCE202	Neha Rani
59	17ESKCE204	Salman Kureshi
60	17ESKCE205	Shakeel Ahmad
61	17ESKCE206	Vivek Sharma
62	17ESKCE207	Wajid Hussain Mattoo

	Batch No	S. No.
	A1	1 to 22
	A2	23 to 44
	A3	45 to 65
	Ax	1 to 33
	Ay	34 to 65

Batch No	S. No.
B1	1 to 21
B2	22 to 42
B3	43 to 62
Bx	1 to 31
By	32 to 62

GATE 2019 Data *(Only 4th year students of Civil Engineering)*

Institute Name: **SKIT, Jaipur**

Sr. No.	Student Name	Branch	Registered in GATE (Yes/No)	Category	GATE Registration Number	Registration Fee Amount	Qualify Gate (Yes/No)	Marks Obtained	Aadhar No.	Score Card (Y/N)
1	ABU KHURAM	CIVIL	YES	OBC	CE19S73017705	1500	YES	39.56	374955962281	478
2	VINIT KALAWAT	CIVIL	YES	SC	CE19S83020179	750	YES	40.82	326352054389	493
3	manish kumar	CIVIL	yes	OBC	CE19S73017803	1500	YES	27.02	588347975491	337
4	shubham swami	CIVIL	yes	OBC	CE19S73017691	1500	YES	31.9	771533389056	392
5	Bhavna Gothwal	CIVIL	Yes	SC	CE19S83018247	750	YES	27.05	776757984798	337

SWAMI KESHVANAND INSTITUTE OF TECHNOLOGY, JAIPUR

DEPARTMENT OF CIVIL ENGINEERING

NOTICE regarding GATE section (2018-2019)

As discussed with Prof. Dr. D. K. Sharma (HOD, CE), I would like to share some decisions that were being taken related to Gate section (Section-A) of III" and V semester.

1. All the faculties who are taking classes in GATE section will be prepare a tutorial sheet which will consist of minimum 10 questions that were being asked in the Competitive exams like GATE and IES.

2. Questions can be subjective or objective type. Also specify the year at the end of each question in which it was asked.

2. Faculties will mail this sheet to all the students.

3. One hardcopy of tutorial sheets will be submitted to the GATE Coordinator along with its answer key.

4. The tutorial sheet of each subject should be prepared and mailed weekly (preferably by Saturday of every week).

5. Students can ask their doubts and queries related to these sheets in the Library period assigned to them or in the last minutes of the lecture.

Concerned faculties: IIIrd Sem

S.No.	Faculty	Subject
1	DEEPAK AGARWAL	S.O.M-1
2	SURESH CHOUDHARY	F.M & HHM

Concerned faculties: Vth Sem

S.No.	Faculty	Subject
1	SITARAM SAINI	T.O.S-I& T.O.S-2
2	DR.D.K.SHARMA	D.C.S
3	DR.NEHA SHRIVASTAVA	G.E

SITARAM SAINI
(GATE Coordinator)

SKIT Jaipur

2018-19

Section-3CEA

SKIT

Lecture Room-

	08:00-09:00 8:00 - 9:00	09:00-10:00 9:00 - 10:00	10:00-11:00 10:00 - 11:00	Break 11:00 - 11:30	11:30-12:30 11:30 - 12:30	12:30-13:30 12:30 - 13:30	13:30-14:30 13:30 - 14:30	14:30-15:30 14:30 - 15:30
Mo	EM 1F1 AJ	FM 1F1 Srijan	BMC 1F1 MMS		Surv. Lab Survey Lab-(G Floor) T1 AM CACED CAD Lab(CE-G Floor) T2 AK			
Tu	MEFA 1F1 SKM	BMC 1F1 MMS	SS Soft Skill Cell LG		CACED CAD Lab(CE-G Floor) T1 AK Surv. Lab Survey Lab-(G Floor) T2 AM			
We	EM 1F1 AJ	BMC 1F1 MMS	Geolog. 1F1 PKG		AEM 1F1 CPJ	FM 1F1 Srijan		
Th	AEM 1F1 CPJ	Geolog. Lab EG Lab PKG Concrete Lab(Old Pharm) CEM Lab MMS FM Lab FM Lab Srijan			Surveying 1F1 AM	FM 1F1 Srijan		
Fr	MEFA 1F1 SKM	FM Lab FM Lab Srijan Geolog. Lab EG Lab PKG Concrete Lab(Old Pharm) CEM Lab MMS			Geolog. 1F1 PKG	AEM 1F1 CPJ	Surveying 1F1 AM	
Sa	AEM 1F1 CPJ	Concrete Lab(Old Pharm) CEM Lab MMS FM Lab FM Lab Srijan Geolog. Lab EG Lab PKG			SS Soft Skill Cell LG	BMC 1F1 MMS	Surveying 1F1 AM	

Timetable generated:27/07/2018

Teachers:

AJ Akash Johari	MM Manmohan Sh
AK Amit Kumar	PKG Pankaj Gupta
AM Ankur Mishra	SKM Sanjeev Kum
CPJ Chandra Prak	Srij Srijan Mishra
LG Lalit Gehlot	

Subjects:

AEM	Advanced Engineering Mathematics
BMC	Building Materials and Construction
CACED	Computer Aided Civil Engineering Drawing
CEM Lab	Civil Engineering Materials Lab
EG Lab	Engineering Geology Lab
EM	Engineering Mechanics
FM Lab	Fluid Mechanics Lab
FM	Fluid Mechanics
Geolog.	Engineering Geology
MEFA	Managerial Economics and Financial Accounting
SS	Soft Skill
Surv. Lab	Surveying Lab-II

Classrooms:

1F1	1F1
CAD Lab	CAD Lab (Civil Block-Grou
Concret	Concrete Lab (Old Pharm
FM Lab	FM Lab -(ME I Floor)
Geolog.	Geology Lab (Ground Floo
S.S. Cel	Soft Skills Cell (I Floor)
Survey	Survey Lab-(Ground Floo

SKIT Jaipur
Section-5CEA

SKIT

Lecture Room-

	08:00-09:00 8:00 - 9:00	09:00-10:00 9:00 - 10:00	10:00-11:00 10:00 - 11:00	Break 11:00 - 11:30	11:30-12:30 11:30 - 12:30	12:30-13:30 12:30 - 13:30	13:30-14:30 13:30 - 14:30	14:30-15:30 14:30 - 15:30
Mo	Survey Lab-(G Floor) Surv. Lab ANM CAD Lab(CE-G Floor) CABD AKG Geotech. Lab Geotech. Lab NSH				BD 1F3 AKG	Geotech.-I 1F3 NSH	Surv.-I 1F3 ANM	1F3 Geotech.-I (Tut) NSH TOS-I (Tut) Tutorial Room AM
Tu	Geotech. Lab Geotech. Lab NSH Survey Lab-(G Floor) Surv. Lab ANM CAD Lab(CE-G Floor) CABD AKG				Surv.-I 1F3 ANM	BD 1F3 AKG	Geotech.-I 1F3 NSH	Env. Engg.-I 1F3 PGCE
We	CAD Lab(CE-G Floor) CABD AKG Geotech. Lab Geotech. Lab NSH Survey Lab-(G Floor) Surv. Lab ANM				Env. Engg.-I 1F3 PGCE	BD 1F3 AKG	TOS-I (Tut) Tutorial Room AM 1F3 Geotech.-I (Tut) NSH	
Th	TOS-I 1F3 Srijan	CRT 1F3 SKR			TOS-I 1F3 Srijan	SWM 1F3 SKR	Env. Engg. Lab EE Lab-I PGCE SE Lab Str. Lab Srijan	
Fr	Env. Engg.-I 1F3 PGCE	CRT 1F3 SKR			SWM 1F3 SKR	TOS-I 1F3 Srijan	SE Lab Str. Lab Srijan Env. Engg. Lab EE Lab-I PGCE	
Sa	Geotech.-I 1F3 NSH	CRT 1F3 SKR			SWM 1F3 SKR	Surv.-I 1F3 ANM	SE Lab Str. Lab Srijan Env. Engg. Lab EE Lab-I PGCE	

Timetable generated:27/07/2018

Teachers:

AKG	Ajay Kumar Gautam	PGCE	Priyanka Gupta
AM	Ankur Mishra	SKR	Suniti Kumari
ANM	Anirudh Mathur	Srijan	Srijan Mishra
NSH	Neha Shrivastava		

Subjects:

BD	Building Design
CABD	Computer Aided Building Design
CRT	Campus Recruitment Training_CEA
EE Lab-I	Environmental Engineering Lab-I
Env. Engg.-	Environmental Engineering-I
Geotech. La	Geotechnical Engineering Lab-I
Geotech.-I	Geotechnical Engineering-I
Geotech.-I	Geotechnical Engineering-I
SWM	Solid Waste Management
Str. Lab	Structural Engineering Lab
Surv. Lab	Surveying Lab-II
Surv.-I	Surveying-II
TOS-I (Tut)	Theory of Structures-I

Classrooms:

1F3	1F3
CAD Lab(CE-G	CAD Lab (Civil Block-Ground Floor)
Env. Engg. Lab	Environmental Engg. Lab (First Floor-Civil Block)
Geotech. Lab	Geotechnical Lab (Basement)
SE Lab	Structural Engg Lab
Survey Lab-(G	Survey Lab-(Ground Floor)
Tutorial Room	Tutorial Room (First Floor-Civil Block)

Swami Keshvanand Institute of Technology, Mangement & Gramothan

Ramnagaria, jagatoura, Jaipur-17

III Sem (II YEAR) A

Session:2018-19

S.NO	Roll	Name					
1	17ESKCE001	Aakash Meena					
2	17ESKCE002	Aashish Gupta					
3	17ESKCE003	Aashutosh Sharma					
4	17ESKCE005	Aayush Khandelwal					
5	17ESKCE006	Abhishek Damachya					
6	17ESKCE007	Abhishek Meena					
7	17ESKCE008	Aditya Lavania					
8	17ESKCE009	Ajay Mewal					
9	17ESKCE010	Akhil Bishnoi					
10	17ESKCE011	Akshay Pareek					
11	17ESKCE012	Aman Jaiman					
12	17ESKCE013	Aniruddh Dubey					
13	17ESKCE014	Ankit Krishniya					
14	17ESKCE015	Ankush Choudhary					
15	17ESKCE016	Anshuman Singh Saugat					
16	17ESKCE017	Anurag Shrivastava					
17	17ESKCE018	Aryan Meena					
18	17ESKCE019	Ashutosh Sompura					
19	17ESKCE020	Ayush Sharma					
20	17ESKCE021	Bhaarat Vaishnav					
21	17ESKCE022	Bharat Kumar Meena					
22	17ESKCE023	Bhavesh Lavania					
23	17ESKCE024	Bhawana Paliwal					
24	17ESKCE025	Deepak Maholiya					
25	17ESKCE026	Dewang Saraswat					
26	17ESKCE027	Divyanshu Aditya Peepliwal					
27	17ESKCE028	Divyaraj					
28	17ESKCE029	Gaurav Mangal					
29	17ESKCE030	Geetesh Rajawat					
30	17ESKCE031	Goransh Vaishnav					
31	17ESKCE032	Hardik Jharwal					
32	17ESKCE033	Harsh Sangwan					
33	17ESKCE034	Harsh Soni					
34	17ESKCE035	Harshit Khichi					
35	17ESKCE036	Harshita Gehlot					
36	17ESKCE037	Himanshu Agrawal					
37	17ESKCE038	Himanshu Garg					
38	17ESKCE039	Irshad Khan					
39	17ESKCE040	Jayesh Saini					
40	17ESKCE041	Kamal Singh					
41	17ESKCE042	Khush Deep Yadav					
42	17ESKCE043	Khusheeram Meena					

43	17ESKCE044	Khushi Sharma					
44	17ESKCE046	Lakshay Vijay					
45	17ESKCE047	Lata Prajapat					
46	17ESKCE048	Lokendra Singh Rajawat					
47	17ESKCE049	Manish Kumar					
48	17ESKCE050	Manoj Kumar					
49	17ESKCE051	Manoj Kumar Meena					
50	17ESKCE052	Mansi Dhaked					
51	17ESKCE053	Manu					
52	17ESKCE054	Mateen Ahmed					
53	17ESKCE055	Milind Tak					
54	17ESKCE056	Mohammad Juber					
55	17ESKCE057	Mohit Kumar					
56	17ESKCE058	Mohit Meena					
57	17ESKCE059	Mukul Thurwal					
58	17ESKCE060	Mustkim					
59	17ESKCE061	Nagendra Singh Rathore					
60	17ESKCE062	Naveen Meena					
61	17ESKCE063	Neeraj Meena					
62	17ESKCE064	Neeraj Sharma					
63	17ESKCE065	Nikhil Bhan Verma					

Batch No	S.NO
A1	1 to 22
A2	23 to 42
A3	43 to 63
G1	1 to33
G2	34 to 63

GATE 2020 Data

Institute Name:	SKIT, Jaipur						
S. No.	Student Name	Branch	Category	GATE Registration Number	GATE Qualified (YES/NO)	Marks Obtained	GATE SCORE
1	Ajay Gupta	Civil Engineering	Gen	CE20S83021234	Yes	45.24	484
2	Ashish Goyal	Civil Engineering	Gen	CE20S83019074	Yes	45.58	488
3	Bijendra Kumar Singh	Civil Engineering	OBC	CE20S73019622	Yes	46.13	494
4	Divyansh gautam	Civil Engineering	Gen	CE20S73017010	Yes	37.3	393
5	Omendra Pal Shekhawat	Civil Engineering	Gen	CE20S73019545	Yes	35.7	381
6	Sanchay rewar	Civil Engineering	OBC	Ce20s83016094	Yes	46.95	503

SWAMI KESHVANAND INSTITUTE OF TECHNOLOGY, JAIPUR

DEPARTMENT OF CIVIL ENGINEERING

NOTICE regarding GATE section(2019-2020)

As discussed with Associate Prof. L.N.Dutt (HOD, CE), I would like to share some decisions that were being taken related to Gate section (Section-A) of III" and V semester.

1. All the faculties who are taking classes in GATE section will be prepare a tutorial sheet which will consist of minimum 10 questions that were being asked in the Competitive exams like GATE and IES.

2. Questions can be subjective or objective type. Also specify the year at the end of each question in which it was asked.

2. Faculties will mail this sheet to all the students.

3. One hardcopy of tutorial sheets will be submitted to the GATE Coordinator along with its answer key.

4. The tutorial sheet of each subject should be prepared and mailed weekly (preferably by Saturday of every week).

5. Students can ask their doubts and queries related to these sheets in the Library period assigned to them or in the last minutes of the lecture.

Concerned faculties: IIIrd Sem

S.No.	Faculty	Subject
1	SHUBHAM KUMAWAT	FM/HHM
2	MANMOHAN SHARMA	SOM
3	AKASH JOHARI	EM

Concerned faculties: Vth Sem

S.No.	Faculty	Subject
1	SITARAM SAINI	WRE
2	SAURABH SINGH	E.E
3	PANKAJ GUPTA	G.E

Sitaram Saini

SITARAM SAINI

(Gate Coordinator)

Swami Keshvanand Institute of Technology, Management and Gramothan

Time Table for 3ed Semester Section A CIVIL Engineering Department (2019-20)

Ref. No. – SKIT/CE/2019-2020/

Time/Day	8:00-9:00	9:00-10:00	10:00-11:00	11:00-11:30	11:30-12:30	12:30-1:30	1:30-2:30
MONDAY	EG Lab (LND) EG Lab			L	FM(L)NS 1F2	EM (L) MMS 1F2	SURV(L) ANM 1F2
	Surveying Lab (ANM) SURV Lab						
	CACD Lab (NSD) CABD Lab						
TUESDAY	CACD Lab (NSD) CABD Lab			U	AEM-I(L) VS 1F2	MEFA(L) MB 1F2	BMC(L) DS 1F2
	EG Lab (LND) EG Lab						
	Surveying Lab (ANM) SURV Lab						
WEDNESDAY	Surveying Lab (ANM) SURV Lab			N	SURV(L) ANM 1F2	Soft Skill (MS) 1F2	Club Activity
	CACD Lab (NSD) CABD Lab						
	EG Lab (LND) EG Lab						
THURSDAY	FM(L) NS 1F1	AEM-I(L) VS 1F1	BMC(L) DS 1F1	C	FM Lab (SM) ME Block		EM (L) MMS 1F3
					CEM Lab (DS) Concrete Lab		
					Industrial Training (NS) 1F3	AEM(T) VS 1F3	
FRIDAY	SURV(L) ANM 1F2	EG(L) LND 1F2	SURV(L) ANM 1F2		Industrial Training (NS) 1F3	AEM(T) VS 1F3	Soft Skill (MS)1F3
					FM Lab (SM) ME Block		
					CEM Lab (DS) Concrete Lab		
SATURDAY	AEM-I(L) VS 1F1	EG(L) LND 1F1	MEFA(L) MB 1F1	H	CEM Lab (DS) Concrete Lab		BMC(L) DS 1F3
					Industrial Training (NS) 1F3	AEM(T) VS 1F3	
					FM Lab (SM) ME Block		

Abbreviations:

LND- Lok Nath Datt, ANM- Anirudh Mathur, DS- Deepak Sharma, MMS- Manmohan Sharma, VS- Vijay Singhal, MB- M.L. Bhargava, SM- Srijan Mishra, NSD- Nishant Sachdeva, NS- Nikhil Sharma, , MS- Mukul Sharma ,VB- Dr. Vishisht Bhaiya

Ajay Gautam, Ankur Mishra
ERP Coordinator

L.N Datt
HOD CE

Swami Keshvanand Institute of Technology, Management and Gramothan

Time Table for 5th Semester Section B CIVIL Engineering Department (2019-20)

Ref. No. – SKIT/CE/2019-2020/

Time/Day	8:00-9:00	9:00-10:00	10:00-11:00	11:00-11:30	11:30-12:30	12:30-1:30	1:30-2:30
MONDAY	GE(L) SM 1F3	SE-I (PJ) 1F3	CT&E (SK) 1F3	L	DCS (L) 1F1 JBJ	NPTEL SWYAM	
TUESDAY	WRE Lab (SRS) SE Lab Basement CE Block			U	RRS(L) NS 1F1	WRE(L) SRS 1F1	
	GE Lab (SM) Geotech Lab CE Block						
	CSD Lab (JBJ) 1F3						
WEDNESDAY	GE(L) SM 1F3	SE-I (PJ) 1F3	CT&E (SK) 1F3	N	WRE(L) SRS 2F3	GE(L) SM 2F3	CLUB Activity
THURSDAY	CSD Lab (JBJ) 1F3			C	TP(AKJ) 1F2	DCS (L) JBJ 1F2	
	WRE Lab (SRS) Project Lab						
	GE Lab (SM) Geotech Lab CE Block						
FRIDAY	SE-I (PJ) 1F3	GE(L) SM 1F3	DCS (L) JBJ 1F3		Industrial Training Lab (KLJ) 1F2	RRS(L) NS 1F2	
SATURDAY	GE Lab (SM) Geotech Lab CE Block			H	NPTEL/ SWAYAM	TP(AKJ) 1F2	
	CSD Lab (JBJ) 1F3						
	WRE Lab (SRS) Project Lab						

Abbreviations:

SM- Srijan Mishra, SK- Suniti Kumari, PJ- Pooja Jain, JBJ- Jetendra B. Jangid, KLJ- Kishan Lal Jain, AKJ- Amit Jakhar, Nikhil Sharma
SRS- Sitaram Saini, PG- Priyanka Gupta, LG- Mr. Lalit Gupta

Ajay Gautam, Ankur Mishra
ERP Coordinator

L.N Datt
HOD CE

2019-2020

GATE 2020 Data

Institute Name:	SKIT, Jaipur
GATE Coordinator Name:	
GATE Coordinator Email:	
GATE Coordinator Phone no:	

S. No.	Student Name	RTU Roll No.	Semester / Section	Mob. No.	Email. Id	Aadhar No.	Category	Registration Fee Amount
1.	AJAY GUPTA	16ESKCE007	VII th A	8209417363	ajaygupta17363@gmail.com	9247-8662-8015	Gen.	1500
2.	ANUJ MEENA	16ESKCE020	VII A	7014655741	meenaanuj98@gmail.com	3907-1114-2525	ST	750
3.	KULDEEP SINGH	16ESKCE051	VII th A	8440853046	kuldeepsinghrawat71@gmail.com	8155-4617-7591	ST	750
4.	NISHA	16ESKCE070	VII th A	9414960324	nishatj328@gmail.com	6034-9533-6078	OBC	750
5.	Aman Singh Chauhan	16ESKCE016	VII A	7073558822	randy987258@gmail.com	2335-2504-0059	Gen	1500
6	Lakshit Joshi	16ESKCE053	VII A	8114460854	namanjoshi121@gmail.com	6962-1753 6061	Gen	1500
7	Kapil Kumar	16ESKCE048	VII A	7597759414	kapilkumar92527@gmail.com	6686-4889-3932	OBC	1500
8.	Meena Khorwal	16ESKCE057	VII A	8302426963	meenakhorwal6963@gmail.com	8468 1122 3084	SC	750
9.	Komal Saini	16ESKCE049	VII A	8890627874	komalsaini187758@gmail.com	654820290718	OBC	750
10	Tanvi Kalal	16ESKCE116	VII B	9116933885	tanvikalal037@gmail.com	650018351982	OBC	750
11.	Ashish Goyal	16ESKCE022	VII A	6375175304	9941484@gmail.com	714103255340	GEN.	1500
12	Jyoti	16ESKCE047	VII A	7240724305	jr476150@gmail.com	250756807767	OBC	750
13	Mohit Meena	16ESKCE060	VII A	8003545679	mohitmeena1998@gmail.com	826676291011	ST	750
14.	Divyansh Gautam	16ESKCE035	VII A	8078657245	dgautam076@gmail.com.	4838 7796 1371	GEN.	1500
15	Navneet Singh	16ESKCE065	VII A	9529993931	snavneet583@gmail.com	238224453046	OBC	1500
16	AYUSH SAINI	16ESKCE024	VII A	6378611267	ayushsaini0004@gmail.com	773470497894	OBC	1500
17	Sumit Kumar	16ESKCE113	VII B	8209391252	sumitkumar969495@gmail.com	310906701534	OBC	1500
18	Tarun Mathur	16ESKCE117	VII B	7597446938	tarun.mathur098@gmail.com	4661 5622 8413	~~OBC~~ GEN	1500
19	Sanchay Rewar	16ESKCE102	VII-B	8769333263	choudhary.sanchay4@gmail.com	934665627741	OBC	1500
20	Yogesh Singh	16ESKCE126	VII-B	7976275273	yaithani.ya@gmail.com	502013485364	GEN	1500
83	Rishi Meena	16ESKCE098	VII-B	9828536186	rishimeena98@gmail.com	640753374096	ST	750
84	Ritik Meena	16ESKCE099	VII-B	7014515323	meenaritik987@gmail.com	796409833154	ST	750
85	Sher singh choudhary	16ESKCE108	VII B	7793809823	shersinghchoudhary977@gmail.com	8206 1249 8488	OBC	1500

GATE 2020 Data

Institute Name:	SKIT, Jaipur
GATE Coordinator Name:	
GATE Coordinator Email:	
GATE Coordinator Phone no:	

S. No.	Student Name	RTU Roll No.	Semester / Section	Mob. No.	Email. Id	Aadhar No.	Category	Registration Fee Amount
21	Sheikh-nayeem	16ESKCE107	VII th (B)	9702119131	Sheikhnayeemsheikh@gmail	503609963036	GEN	1500
22	Shubham Goyal	16ESKCE109	VII th (B)	9887162337	sgoyal7998@gmail.com	688211394981	GEN	1500
23	Vinay Mothodiya	16ESKCE122	VII th (B)	9462533011	mothodiya vinay@gmail.com	708536387910	OBC	1500
24	Priyanka meena	16ESKCE085	VII th (B)	9782024807	Priyankamee902@gmail.com	367508329661	ST	750
25	Vishal Singh Bagel	16ESKCE124	VII (B)	9084159777	vsbvishal19@gmail.com	815646747754	OBC	1500
26	Radhika Gaur	16ESKCE087	VII - B	9116918872	radhikagaur1998@gmail	431658299092	GEN	750.
27	Vartika Swarnkar	16ESKCE119	VII - B	9314296633	Kailashsms87@gmail.com	778186118609	OBC	750
28	Rajesh kumar	16ESKCE092	VII - B	7690007421	rajeshlegha2512@gmail.com	766525809311	OBC	1500
29	Pankaj Kumar	16ESKCE074	VII - B	8209166093	pankajkumar85914@gmail.com	268130388000	OBC	1500
30	Pankaj Saini	16ESKCE075	VII - B	9649716789	Pankajamadiya001@gmail.com	678810160146	OBC	1500
31	Pramod mali	16ESKCE078	VII - B	7791048109	Pmsaini12345@gmail.com	548921234593	OBC	1500
32	Pranav Lohia	16ESKCE079	VII - B	9351683633	lohiapranav1998@gmail.com	367462231805	GEN	1500
33	Ravinder choha	15ESKCE092		8094232602	Ravinderchoha002@gmail	285652786073	OBC	1500
34	Kuber Bhatnagar	17ESKCE401	VII - B	7737133101	Kuberbhatnagar@yahoo.com	783304704316	GEN	1500.
35	Harshit Jain	16ESKCE039	VII - A	8764356222.	harshitjains156g@gmail.com	374957650463	GEN	1500
36	Ravi Raj Meena	16ESKCE400	VII - B	9610101693	raviraimeena45@gmail.com	988076371257	ST	750
37	Kousar Khan	16ESKCE050	VII - A	7597300813	kkhousar kkhan@gmail.com	7181 7985 7436	GEN	~~1500~~ 750.
38	Praveen Gusainwal	16ESKCE083	VII - B	9333333977	Praveengusainwal@gmail.com	881176805019	GEN	1500
39	Pratik Khatri	16ESKCE082	VII - B	9829987179	Khatripratek29@gmail.com	468031560619	GEN	1500
40	Prasang Sunariya	16ESKCE081	VII - B	9413044424	Tommu Sunariya@gmail.com	720301071440	SC	750
86	Abhishek Saharan	15ESKCE007		7597645392	saharanabhishek7@gmail.com	843974999213	OBC	1500
87	Sahil malar	15ESKCE101		9414140633	sahilmalar36@gmail	9414140633	ST	750
88	Rishabh Karol	16ESKCE097	VII - B	9166966969	rishu291298@gmail.com	729528095855	ST	750

GATE 2020 Data

Institute Name:	SKIT, Jaipur
GATE Coordinator Name:	
GATE Coordinator Email:	
GATE Coordinator Phone no:	

S. No.	Student Name	RTU Roll No.	Semester / Section	Mob. No.	Email. Id	Aadhar No.	Category	Registration Fee Amount
41	Vijay Kumar	16ESKCE121	VII / B	7014222214	vijaykumarmeena1999@gmail.com	430736240502	ST	750
42	Yogesh Parashar	16ESKCE125	VII / B	9782265063	yogeshparashar144@gmail.com	857746577086	GEN	1500
43.	Vedang Trivedi	16ESKCE120	VII / B	8094402057	smackthat99@gmail.com	768101164301	GEN	1500
44	Sunil Chandel	16ESKCE114	VII / B	7425820543	sunilchandel12@gmail.com	7189 4250 2794	SC	750
45.	Omendra Pal	16ESKCE072	VII A	9602869240	omendra434@gmail.com	247082519691	GEN	1500
46.	Suraj Kumar Kumawat	16ESKCE115	VII B	9828338707	Surajkumawat707@gmail.com	872468885394	OBC	1500
47	Shakeel Ahmad	17ESKCE205	VII - B	7780849306	waikshakeel89@gmail	753594930295	OBC	1500
48	Naresh Kumar	16ESKCE064	VII / A	6005502573	nk0417341@gmail.com	328206992337	GEN	1500
49	Anant Kr. Nagar	16ESKCE018	VII th A	7014188532	akanskit@gmail.com	459001035349	SC	750
50	VIVEK SHARMA	17ESKCE206	VII th B	8560007803	viveksharma223@gmail.com	844325790171	GEN	1500
51	Abhijeet Meena	16ESKCE004	VII th - A	7240531570	abhijeetbarwal2@gmail.com	6390 0927 6385	ST	750
52	Jaiveer Singh	16ESKCE046	VII th - A	9079311403	Javeersingh1801@gmail.com	460884180 8512	OBC	1500
53	Aishwarya Sharma	16ESKCE006	VII - A	7737217391	sharma.aishwarya16@yahoo.com		GEN.	1500
54	Rahul Kr. Garg	16ESKCE088	VII - B	8549187949	rgarg3162@gmail.com	7731 5660 6533	GEN.	1500/-
55	SURBHI NORA dev Sharma	16ESKCE111	VII - B	9672821542	s.d.sharma15.sdd@gmail.com	5765 6361 5813	GEN	1500/-
56	Rajesh Meena	16ESKCE093	VII - B	9982682417	byadwalraj9@gmail.com		ST	750/-
57	Piyush Mathur	16ESKCE077	VII - B	7062948848	piyushmathur756@yahoo.in	281427843839	GEN	1500/-
58	Vishal Kawalia	16ESKCE123	VII - B	7014074060	vishalkawalia1530@gmail.com		ST	750/-
59	SOURABH GOAD	16ESKCE116	VII - B	9588912967	Sourabh7773@gmail.com	686326120845	GEN	1500/-
60	RAJAT SHARMA	16ESKCE091	VII - B	9660734382	sharmarajat1999@Gmail.com	689434924623	GEN	1500/-
89.	RAJAT GAUTTAM	16ESKCE300	VII - B	8890019136	gauttamrajat@gmail.com	226129919242	Gen	1500/-
90.	Deepnarayan Pare	16ESKCE031	VII - A	8386999411	dpare.ca@gmail.com		SC.	750/-
91.	Manish Choudhary	15ESKCE057		9602488563	manishqwerty797@gmail.com	257724356005	OBC	1500

GATE 2020 Data

Institute Name:	SKIT, Jaipur
GATE Coordinator Name:	
GATE Coordinator Email:	
GATE Coordinator Phone no:	

S. No.	Student Name	RTU Roll No.	Semester / Section	Mob. No.	Email. Id	Aadhar No.	Category	Registration Fee Amount
60	MOHIT YADAV	16ESKCE061	VII A	9660325452	mohityadav129@gmail.com	973129702 76	SC	750
61	NIDHI RAMAWAT	16ESKCE068	VII A	9413452894	nidhiramawat1998@gmail.com	5938 3020 8127	OBC	750
62	NEHA MEENA	16ESKCE067	VII A	9680627476	nehakavitemina@gmail.com	4881 6288 4427	ST	750
63	MUKTA SOLANKI	16ESKCE063	VII A	9116551430	muktalolanki63@gmail.com	3581 5412 0533	OBC	750.
64	Ravi Boyal	16ESKCE059	VII B	9414381082	Ravi boyal@gmail.com	6866 1174 7371	SC	750
65	MAHESH CHOUDHARY	16ESKCE055	VII A	8949029167	maheshchoudhary809@gmail.com	4902-5292-3268	OBC	1500
66	Heena Choudhary	16ESKCE040	VII A	9782460522	heenachoudhary1122@gmail.com	9578546835 76	OBC	750
67	Deeksha Swami	16ESKCE029	VII A	7976302332	swamijd.712@gmail.com		OBC	750
68	Manish Soni	16ESKCE056	VII A	8107313670	er.manishsoni1998@gmail.com	—	OBC	1500
69.	Rajat Saini	16ESKCE090	VII B	8005800895	rajatkaroodia@gmail.com	6820 4488 4530	OBC	1500
70	Shailja Sehra	16ESKCE105	VII B	9057562039	Sehra.shailja98@gmail.com	8364 0131 2377	ST	750
71	Ravikant Bairwa	16ESKCE096	VII B	9587561347	ravikantdoria1992@gmail.com	5049 0828 3006	SC	750/-
72	Neha Rani	17ESKCE202	VII B	8899252848	nehasingh rajput07@gmail.com	6033 2007 4993	OBC	1500
73	Neeraj Jangid	16ESKCE066	VII A	9602114056	neerajjangid1805@gmail.com	8977 9658 7198	OBC	1500/-
74	Bijendra Kr Singh	16ESKCE028	VII A	9631334389	bijendrakumar525@gmail.com		OBC	1500/-
75	Subhanshu Sharma	16ESKCE112	VII B	9529166522	shubhanshudashish@gmail.com		Gen	1500/-
76	Arck Jain	16ESKCE021	VII A	8005503324	arck.jain@gmail.com	3670 4208 3147	Gen	1500/-
77	Om Kar Gunjal	16ESKCE073	VII B	8005774979	Gunjalomkar1809@gmail.com	3708 8887 7002	OBC	1500/-
78	Vikash kumar	16ESKCE301	VII B	8619738329	vikash.kms1997.vk@gmail.com	7473 1890 8687	OBC	1500/-
79	Nikhil Chandelwal	16ESKCE009	VII A	7017247156	Iamnikhil712@gmail.com	3642 0824 8423	GEN	1500/-
80	Abhay Meena	16ESKCE003	VII A	9079046862	abhaymeena34@gmail.com	8330 4662 8067	ST	750/-
81	AKSHAT JHARWAL	16ESKCE008	VII A	8114420152	sing.akshat@gmail.com		ST	750/-
82	TILAK SINGH YADAV	15ESKCE115	Pass out	8824715480	tilakyadav64@gmail.com	5760 4508 4468	OBC	1500/-

2020-21

असतो मा सद्गमय

SWAMI KESHVANAND INSTITUTE OF TECHNOLOGY, JAIPUR

DEPARTMENT OF CIVIL ENGINEERING

NOTICE regarding GATE section

As discussed with Assistant Prof. Pooja Jain (Dy. HOD, CE), I would like to share some decisions that were being taken related to Gate section (Section-A) of III" and V semester.

1. All the faculties who are taking classes in GATE section will be prepare a tutorial sheet which will consist of minimum 10 questions that were being asked in the Competitive exams like GATE and IES.

2. Questions can be subjective or objective type. Also specify the year at the end of each question in which it was asked.

2. Faculties will mail this sheet to all the students.

3. One hardcopy of tutorial sheets will be submitted to the GATE Coordinator along with its answer key.

4. The tutorial sheet of each subject should be prepared and mailed weekly (preferably by Saturday of every week).

5. Students can ask their doubts and queries related to these sheets in the Library period assigned to them or in the last minutes of the lecture.

Concerned faculties: IIIrd Sem

S.No.	Faculty	Subject	Signature
1	SHUBHAM KUMAWAT	FM/HHM	
2	MANMOHAN SHARMA	SOM	
3	AKASH JOHARI	EM	

Concerned faculties: Vth Sem

S.No.	Faculty	Subject	Signature
1	NITESH AMBERIA	WRE	
2	SITARAM SAINI	S.A	
3	PANKAJ GUPTA	G.E	

SITARAM SAINI

(GATE Coordinator)

SWAMI KESHVANAND INSTITUTE OF TECHNOLOGY, JAIPUR

DEPARTMENT OF CIVIL ENGINEERING

NOTICE regarding GATE section(2020-2021)

As discussed with Assistant Prof. Pooja Jain (Dy. HOD, CE), I would like to share some decisions that were being taken related to Gate section (Section-A) of III" and V semester.

1. All the faculties who are taking classes in GATE section will be prepare a tutorial sheet which will consist of minimum 10 questions that were being asked in the Competitive exams like GATE and IES.

2. Questions can be subjective or objective type. Also specify the year at the end of each question in which it was asked.

2. Faculties will mail this sheet to all the students.

3. One hardcopy of tutorial sheets will be submitted to the GATE Coordinator along with its answer key.

4. The tutorial sheet of each subject should be prepared and mailed weekly (preferably by Saturday of every week).

5. Students can ask their doubts and queries related to these sheets in the Library period assigned to them or in the last minutes of the lecture.

Concerned faculties: IIIrd Sem

S.No.	Faculty	Subject
1	SHUBHAM KUMAWAT	FM/HHM
2	MANMOHAN SHARMA	SOM

Concerned faculties: Vth Sem

S.No.	Faculty	Subject
1	NITESH AMBERIA	WRE
2	SITARAM SAINI	S.A
3	PANKAJ GUPTA	G.E

SITARAM SAINI

(GATE Coordinator)

Swami Keshvanand Institute of Technology, Management and Gramothan

Time Table for 3rd Semester Section A CIVIL Engineering Department (2020-21) **Ref. No. – SKIT/CE/2020-2021/**

Time/Day	8:00-8:50	9:00-09:50	10:00-10:50	11:00-11.50	12:30-1:20	1:30-2:20	2:30-3:20	3:30 to 4:20
MONDAY		CACED Lab (PJ)(9:00 to 10:20)		AEM-I (L) (VS)		BMC(L) (AKJ)	SURVEING (L) VV	
TUESDAY			BMC(L) (AKJ)	MEFA (L) (SM)		EM (L) AJ	CEM Lab (AKJ)(2:30 to 3:50)	
WEDNESDAY				AEM-I(L)(VS)		FM (L) (NS)	BMC(L) (AKJ)	
THURSDAY		Geology Lab (MMS)(9:00 to 10:20)		MEFA (L) (SM)		SURVEING (L) VV	FM (L) (NS)	
FRIDAY			AEM-I (L) (VS)	EG (L) MMS		EM (L) AJ	Surveying Lab (VV)(2:30 to 3:50)	
SATURDAY			EG (L) MMS			SURVEING (L) VV	FM Lab (NS)(2:30 to 3:50)	

Abbreviations:

AKJ- Amit Jakhar, NS- Nikhil Sharma, VV- Vikas Vyas, PJ- Pooja Jain, MMS- Manmohan Sharma, VS- Dr. Vijay Singhal
SM- Sanjeev Mathur, AJ- Akash Johari,

ANKUR MISHRA
ERP Coordinator

Swami Keshvanand Institute of Technology, Management and Gramothan

Time Table for 5th Semester Section A CIVIL Engineering Department (2020-21) **Ref. No. – SKIT/CE/2019-2020/**

Time/Day	8:00-8:50	9:00-09:50	10:00-10:50	11:00-11.50	12:30-1:20	1:30-2:20	2:30-3:20	3:30-4:20
MONDAY		WRE(L) NA				DCS(L) LG		
TUESDAY		WRE(L) NA	SE-I (L) PJ			CT &E (L) VV		
WEDNESDAY		GE Lab (DH)(9:00 to 10:20)		SE-I (L) PJ		GIT(L) JBJ	CT &E (L) VV	
THURSDAY		WRED Lab (NA)(9:00 to 10:20)		GE (L) DH		TP(L) AKJ	DCS(L) LG	
FRIDAY			GE (L) DH			GIT(L) JBJ	CSD Lab (LG)(2:30 to 3:50)	
SATURDAY				GE (L) DH		TP(L) AKJ	DCS(L) LG	

Abbreviations:

AKJ- Amit Jakhar, VV- Vikas Vyas, Deepak Haritwal, PJ- Pooja Jain, JBJ- Jitendra babulal jangid, LG- Dr. Lalit Gupta,

ANKUR MISHRA
ERP Coordinator

GATE Registed student Session 2020-21 Civil engg

S.No.	Email Address	Student Name	RTU Roll Number	GATE Registration Number	Gate Exam Date	Gate Exam Center City
1	btech17eskce015@skit.ac.in	ANKUSH CHOUDHARY	17ESKCE015	CE21S13018353	02-06-2021	Jaipur
2	princeshrivastava11@gmail.com	Anurag Shrivastava	17eskce017	CE21S23025180	02-06-2021	Kota
3	bhaaratvaishnav19@gmail.com	Bhaarat Vaishnav	17ESKCE021	CE21S13019333	02-06-2021	Jaipur
4	bhawanakiran99@gmail.com	Bhawana Paliwal	17ESKCE024	B521P67	03-06-2021	Udaipur
5	dewang.dewang7@gmail.com	Dewang Saraswat	17ESKCE026	CE21S13020103	02-06-2021	JAIPUR
6	geeteshsinghrajawat2001@gmail.com	Geetesh Rajawat	17ESKCE030	CE21S13017038	02-06-2021	Jaipur
7	hk9734.hk@gmail.com	Harshit Khichi	17ESKCE035	CE21S13016174	02-06-2021	Jaipur
8	harshitagehlot12345@gmail.com	Harshita Gehlot	17ESKCE036	CE21S13014091	02-06-2021	Jaipur
9	himanshug8288@gmail.com	HIMANSHU GARG	17ESKCE038	B185C54	02-06-2021	JAIPUR
10	sainijay199@gmail.com	Jayesh saini	17ESKCE040	CE21S23016087	01-06-2021	Jaipur
11	khushdeepyadav67@gmail.com	Khushdeep yadav	17eskce042	CE21S23020075	02-06-2021	Jaipur
12	lakshayvijay47@gmail.com	LAKSHAY VIJAY	17ESKCE046	CE21S23018115	02-06-2021	Jaipur
13	rajdevdhaked@gmail.com	Mansi Dhaked	17ESKCE052	CE21S23021198	02-06-2021	Jaipur
14	matinahmed747@gmail.com	Mateen Ahmed	17ESKCE054	CE21S13014173	02-06-2021	Jaipur
15	bhannikhil2@gmail.com	NIKHIL BHAN	17ESKCE065	CE21S11301245	02-06-2021	jaipur
16	pallav7230@gmail.com	Pallav jain	17ESKCE069	CE21S23015136	02-06-2021	Jaipur
17	pankajmeena1498@gmail.com	Pankaj meena	17ESKCE070	CE21S13019111	02-06-2021	Jaipur
18	pankajmeena1498@gmail.com	Pankaj meena	17ESKCE070	CE21S13019111	02-06-2021	Jaipur
19	psaditya81@gmail.com	Pardeep Sharma	17eskce071	CE21S23015081	02-06-2021	Jaipur
20	psaditya81@gmail.com	Pardeep Sharma	17eskce071	CE21S23015081	02-06-2021	Jaipur
21	btech17eskce075@skit.ac.in	Peeyush Meena	17ESKCE075	CE21S23021300	02-06-2021	Jaipur
22	psrathore7206@gmail.com	Prashant	17ESKCE078	CE21S23014216	02-06-2021	Jaipur
23	iamprashantsharma1@gmail.com	Prashant Mishra	17ESKCE079	CE21S13015143	02-06-2021	Jaipur
24	priyanshumeena9@gmail.com	Priyanshu	17ESKCE083	CE21S23016200	02-06-2021	Jaipur
25	pulkitsharma2904@gmail.com	Pulkit Sharma	17ESKCE084	CE21S13020115	02-06-2021	Jaipur
26	rkmeena946277@gmail.com	Rahul kumar	17ESKCE086	CE21S23020137	02-06-2021	Jaipur
27	rohithirania@gmail.com	Rohit hirania	17ESKCE090	CE21S13016091	02-06-2021	Jaipur

28	rohithirania@gmail.com	Rohit hirania	17ESKCE090	CE21S13016091	02-06-2021	Jaipur
29	rohitmahar784@gmail.com	Rohit Mahar	17ESKCE092	CE21S23015017	02-06-2021	SKIT
30	Sakshipant94@gmail.com	Sakshi Pant	17ESKCE096	CE21S13015075	02-06-2021	Jaipur
31	Sakshipant94@gmail.com	Sakshi Pant	17ESKCE096	CE21S13015075	02-06-2021	Jaipur
32	sharma1sakshi14@gmail.com	Sakshi Sharma	17ESKCE097	CE21S23020263	02-06-2021	Jaipur
33	shahdabkhan017@gmail.com	Shahdab khan	17ESKCE102	CE21S13021030	02-06-2021	Jaipur
34	shreyayadav13109@gmail.com	Shreya Yadav	17ESKCE105	CE21S23025182	02-06-2021	Kota
35	shrvan0603@gmail.com	Shrvan Choudhary	17Eskce107	CE21S13019326	02-06-2021	Jaipur
36	shubhammeena281999@gmail.com	Shubham meena	17ESKCE109	CE21S1317174	02-06-2021	Jaipur
37	Khandalshyam007@gmail.com	Shyam Sharma	17eskce111	CE21S13015131	02-06-2021	Jaipur
38	Sumekmeena@gmail.com	Sumek meena	17ESKCE113	CE21S23020301	02-06-2021	Jaipur
39	GTARUN600@GMAIL.COM	Tarun Goyal	17eskce116	CE21S13025463	02-06-2021	Kota
40	tarun612kumawat2000@gmail.com	Tarun kumawat	17eskce117	CE21S13020193	02-06-2021	Jaipur
41	btech17eskce118@skit.ac.in	Tilak raj meena	17ESKCE118	B466Y34	02-06-2021	Jaipur
42	upinberiwal@gmail.com	Upin	17ESKCE120	CE21S13017162	02-06-2021	Jaipur
43	vikashsharma6265@gmail.com	vikash sharma	17ESKCE123	CE21S13014073	02-06-2021	Jaipur
44	shiharavishal@gmail.com	Vishal Meena	17ESKCE124	CE21S13018343	02-06-2021	Jaipur
45	shiharavishal@gmail.com	Vishal Meena	17ESKCE124	CE21S13018343	02-06-2021	Jaipur
46	yadvendrak123@gmail.com	Yadvendra kumawat	17ESKCE126	CE21S23014229	02-06-2021	JAIPUR
47	yashpalsoni1318@gmail.com	Yashpal soni	17ESKCE127	CE21S23020223	02-06-2021	Jaipur
48	ravikantsahu271998@gmail.com	Ravi Kant Sahu	17ESKCE300	CE21S23018003	02-06-2021	JAIPUR
49	mkmeena8866@gmail.com	mohit kumar	17eskceo57	CE21S23019117	02-06-2021	Jaipur
50	divyanshuaditya11@gmail.com	Divyanshu Aditya	17eslce027	CE21S13017154	02-06-2021	Jaipur
51	btech18eskce200@skit.nic.in	Aarif Majeed	18ESKCE200	CE21S23015157	01-06-2021	Jaipur (SKIT)
52	ayush.k0709@gmail.com	Ayush Kumar	18ESKCE202	B231V56	02-06-2021	Jaipur

CE	GATE - SYLLABUS : Civil Engineering

Section 1: Engineering Mathematics

Linear Algebra: Matrix algebra; Systems of linear equations; Eigen values and Eigen vectors.

Calculus: Functions of single variable; Limit, continuity and differentiability; Mean value theorems, local maxima and minima; Taylor series; Evaluation of definite and indefinite integrals, application of definite integral to obtain area and volume; Partial derivatives; Total derivative; Gradient, Divergence and Curl, Vector identities; Directional derivatives; Line, Surface and Volume integrals.

Ordinary Differential Equation (ODE): First order (linear and non-linear) equations; higher order linear equations with constant coefficients; Euler-Cauchy equations; initial and boundary value problems.

Partial Differential Equation (PDE): Fourier series; separation of variables; solutions of one-dimensional diffusion equation; first and second order one-dimensional wave equation and two-dimensional Laplace equation.

Probability and Statistics: Sampling theorems; Conditional probability; Descriptive statistics – Mean, median, mode and standard deviation; Random Variables – Discrete and Continuous, Poisson and Normal Distribution; Linear regression.

Numerical Methods: Error analysis. Numerical solutions of linear and non-linear algebraic equations; Newton's and Lagrange polynomials; numerical differentiation; Integration by trapezoidal and Simpson's rule; Single and multi-step methods for first order differential equations.

Section 2: Structural Engineering

Engineering Mechanics: System of forces, free-body diagrams, equilibrium equations; Internal forces in structures; Frictions and its applications; Centre of mass; Free Vibrations of undamped SDOF system.

Solid Mechanics: Bending moment and shear force in statically determinate beams; Simple stress and strain relationships; Simple bending theory, flexural and shear stresses, shear centre; Uniform torsion, Transformation of stress; buckling of column, combined and direct bending stresses.

Structural Analysis: Statically determinate and indeterminate structures by force/ energy methods; Method of superposition; Analysis of trusses, arches, beams, cables and frames; Displacement methods: Slope deflection and moment distribution methods; Influence lines; Stiffness and flexibility methods of structural analysis.

Construction Materials and Management: Construction Materials: Structural Steel – Composition, material properties and behaviour; Concrete - Constituents, mix design, short-term and long-term properties. Construction Management: Types of construction projects; Project planning and network analysis - PERT and CPM; Cost estimation.

Concrete Structures: Working stress and Limit state design concepts; Design of beams, slabs, columns; Bond and development length; Prestressed concrete beams.

Steel Structures: Working stress and Limit state design concepts; Design of tension and compression members, beams and beam- columns, column bases; Connections - simple and eccentric, beam-column connections, plate girders and trusses; Concept of plastic analysis - beams and frames.

Section 3: Geotechnical Engineering

Soil Mechanics: Three-phase system and phase relationships, index properties; Unified and Indian standard soil classification system; Permeability - one dimensional flow, Seepage through soils – two - dimensional flow, flow nets, uplift pressure, piping, capillarity, seepage force; Principle of effective stress and quicksand condition; Compaction of soils; One-dimensional consolidation, time rate of consolidation; Shear Strength, Mohr's circle, effective and total shear strength parameters, Stress-Strain characteristics of clays and sand; Stress paths.

Foundation Engineering: Sub-surface investigations - Drilling bore holes, sampling, plate load test, standard penetration and cone penetration tests; Earth pressure theories - Rankine and Coulomb; Stability of slopes – Finite and infinite slopes, Bishop's method; Stress distribution in soils – Boussinesq's theory; Pressure bulbs, Shallow foundations – Terzaghi's and Meyerhoff's bearing capacity theories, effect of water table; Combined footing and raft foundation; Contact pressure; Settlement analysis in sands and clays; Deep foundations – dynamic and static formulae, Axial load capacity of piles in sands and clays, pile load test, pile under lateral loading, pile group efficiency, negative skin friction.

Section 4: Water Resources Engineering

Fluid Mechanics: Properties of fluids, fluid statics; Continuity, momentum and energy equations and their applications; Potential flow, Laminar and turbulent flow; Flow in pipes, pipe networks; Concept of boundary layer and its growth; Concept of lift and drag.

Hydraulics: Forces on immersed bodies; Flow measurement in channels and pipes; Dimensional analysis and hydraulic similitude; Channel Hydraulics - Energy-depth relationships, specific energy, critical flow, hydraulic jump, uniform flow, gradually varied flow and water surface profiles.

Hydrology: Hydrologic cycle, precipitation, evaporation, evapo-transpiration, watershed, infiltration, unit hydrographs, hydrograph analysis, reservoir capacity, flood estimation and routing, surface run-off models, ground water hydrology - steady state well hydraulics and aquifers; Application of Darcy's Law.

Irrigation: Types of irrigation systems and methods; Crop water requirements - Duty, delta, evapo-transpiration; Gravity Dams and Spillways; Lined and unlined canals, Design of weirs on permeable foundation; cross drainage structures.

Section 5: Environmental Engineering

Water and Waste Water Quality and Treatment: Basics of water quality standards – Physical, chemical and biological parameters; Water quality index; Unit processes and operations; Water requirement; Water distribution system; Drinking water treatment.

Sewerage system design, quantity of domestic wastewater, primary and secondary treatment. Effluent discharge standards; Sludge disposal; Reuse of treated sewage for different applications.

Air Pollution: Types of pollutants, their sources and impacts, air pollution control, air quality standards, Air quality Index and limits.

Municipal Solid Wastes: Characteristics, generation, collection and transportation of solid wastes, engineered systems for solid waste management (reuse/ recycle, energy recovery, treatment and disposal).

Section 6: Transportation Engineering

Transportation Infrastructure: Geometric design of highways - cross-sectional elements, sight distances, horizontal and vertical alignments.

Geometric design of railway Track – Speed and Cant.

Concept of airport runway length, calculations and corrections; taxiway and exit taxiway design.

Highway Pavements: Highway materials - desirable properties and tests; Desirable properties of bituminous paving mixes; Design factors for flexible and rigid pavements; Design of flexible and rigid pavement using IRC codes

Traffic Engineering: Traffic studies on flow and speed, peak hour factor, accident study, statistical analysis of traffic data; Microscopic and macroscopic parameters of traffic flow, fundamental relationships; Traffic signs; Signal design by Webster's method; Types of intersections; Highway capacity.

Section 7: Geomatics Engineering

Principles of surveying; Errors and their adjustment; Maps - scale, coordinate system; Distance and angle measurement - Levelling and trigonometric levelling; Traversing and triangulation survey; Total station; Horizontal and vertical curves.

Photogrammetry and Remote Sensing - Scale, flying height; Basics of remote sensing and GIS

SWAMI KESHVANAND INSTITUTE OF TECHNOLOGY, JAIPUR

DEPARTMENT OF CIVIL ENGINEERING

GATE-ASSIGNMENT

Q.1. The staff reading taken on a workshop floor using a level is 0.645 m. The inverted staff reading taken to the bottom of a beam is 2.960 m. The reduced level of the floor is 40.500 m. The reduced level (expressed in m) of the bottom of the beam is

A. 44.105

B. 43.460

C. 42.815

D. 41.145

Q.2. The system that uses the Sun as a source of electromagnetic energy and records the naturally radiated and reflected energy from the object is called

A. Geographical Information System

B. Global Positioning System

C. Passive Remote Sensing

D. Active Remote Sensing

Q.3. A reinforced concrete (RC) beam with width of 250 mm and effective depth of 400 mm is reinforced with Fe415 steel. As per the provisions of IS 456-2000, the minimum and maximum amount of tensile reinforcement (expressed in mm2) for the section are, respectively

A. 250 and 3500

B. 205 and 4000

C. 270 and 2000

D. 300 and 2500

Q.4. For M25 concrete with creep coefficient of 1.5, the long-term static modulus of elasticity (expressed in MPa) as per the provisions of IS:456-2000 is _____.

A. 1250

B. 10,000

C. 1000

D. 12,500

Q.5. The porosity (n) and the degree of saturation (S) of a soil sample are 0.7 and 40%, respectively. In a $100m^3$ volume of the soil, the volume (expressed in m3) of air is _____ .

A. 42

B. 4.2

C. 0.42

D. 0.7

Q.6. A drained triaxial compression test on a saturated clay yielded the effective shear strength parameters as c' = 15 kPa and ϕ' = 22o. Consolidated Undrained triaxial test on an identical sample of this clay at a cell pressure of 200 kPa developed a pore water pressure of 150kPa at failure. The deviator stress (expressed in kPa) at failure is _____ .

A. 104.39

B. 50

C. 154.39

D. NOT

Q.7. A hydraulically efficient trapezoidal channel section has a uniform flow depth of 2m. The bed width (expressed in m) of the channel is _____ .

A. 4
B. 2.31
C. 2
D. 1.154

Q.8. Effluent from an industry 'A' has a pH of 4.2. The effluent from another industry 'B' has double the hydroxyl (OH-) ion concentration than the effluent from industry 'A'. pH of effluent from the industry 'B' will be _____
A. 9.5

B. 4.5

C. 7.5

D. 10

Q.9. An electrostatic precipitator (ESP) with 5600m2 of collector plate area is 96 percent efficient in treating 185 m3/s of flue gas from a 200 MW thermal power plant. It was found that in order to achieve 97 percent efficiency, the collector plate area should be 6100 m2. In order to increase the efficiency to 99 percent, the ESP collector plate area (expressed in m2) would be _____

A. 7011.7
B. 6011.6
C. 8011.8
D. 1011.0

Q.10. The 2-day and 4-day BOD values of a sewage sample are 100 mg/L and 155 mg/L, respectively. The value of BOD rate constant (expressed in per day) is _____

A. 0.55

B. 0.2

C. 0.3

D. 0.75

Q.11. While traveling along and against the traffic stream, a moving observer measured the relative flows as 50 vehicles/hr and 200 vehicles/hr, respectively. The average speeds of the moving observer while traveling along and against the stream are 20 km/hr and 30 km/hr, respectively. The density of the traffic stream (expressed in vehicles/km) is _____

A. 21.67

B. 1.67

C. 3.0

D. 2.4

Q.12. In a one-lane one-way homogeneous traffic stream, the observed average headway is 3.0s. The flow (expressed in vehicles/hr) in this traffic stream is _____.

A. 120

B. 360

C. 1200

D. 3600

Q.13. The atmospheric layer closest to the earth surface is

A. the mesosphere

B. the stratosphere

C. the thermosphere

D. the troposphere

Q.14. A water supply board is responsible for treating 1500 m3/day of water. A settling column analysis indicates that an overflow rate of 20 m/day will produce satisfactory removal for a depth of 3.1 m. It is decided to have two circular settling tanks in parallel. The required diameter (expressed in m) of the settling tanks is _____.

A. 6.5

B. 9.61

C. 6.91

D. 8.1

Q.15. The sound pressure (expressed in μPa) of the faintest sound that a normal healthy individual can hear is

A. 0.2

B. 2

C. 20

D. 55

Q.16. In the context of the IRC 58-2011 guidelines for rigid pavement design, consider the following pair of statements. I: Radius of relative stiffness is directly related to modulus of elasticity of concrete and inversely related to Poisson's ratio II: Radius of relative stiffness is directly related to thickness of slab and modulus of subgrade reaction. Which one of the following combinations is correct?

A. I: True; II: True

B. I: False; II: False

C. I: True; II: False **D. I: False; II: True**

Q.17. If the total number of commercial vehicles per day ranges from 3000 to 6000, the minimum percentage of commercial traffic to be surveyed for axle load is

A. 15

B. 20

C. 25

D. 30

Q.18. Optimal flight planning for a photogrammetric survey should be carried out considering

A. only side-lap **B. only end-lap**
C. either side-lap or end-lap **D. both side-lap as well as end-lap**

Q.19. The reduced bearing of a 10 m long line is N30 °E. The departure of the line is

A. 10.00 m
B. 8.66 m
C. 7.52 m
D. 5.00 m

Q.20. A circular curve of radius R connects two straights with a deflection angle of 60°. The tangent length is

A. 0.577 R

B. 1.155 R

C. 1.732 R

D. 3.464 R

Q.21. The seepage occurring through an earthen dam is represented by a flow net comprising of 10 equi- potential drops and 20 flow channels. The coefficient of permeability of the soil is 3 mm/min and the head loss is 5 m. The rate of seepage (expressed in cm3/s per m length of the dam) through the earthen dam is ___.

A. 500

B. 50

C. 55.5

D. 555

Q.22. OMC-SP and MDD-SP denote the optimum moisture content and maximum dry density obtained from standard Proctor compaction test, respectively. OMC-MP and MDD-MP denote the optimum moisture content and maximum dry density obtained from the modified Proctor compaction test, respectively. Which one of the following is correct?

A. OMC-SP < OMC-MP and MDD-SP < MDD-MP

B. OMC-SP > OMC-MP and MDD-SP < MDD-MP

C. OMC-SP < OMC-MP and MDD-SP > MDD-MP

D. OMC-SP > OMC-MP and MDD-SP > MDD-MP

Q.23. Water flows from P to Q through two soil samples, Soil 1 and Soil 2, having cross sectional area of 80cm2 as shown in the figure. Over a period of 15 minutes, 200 ml of water was observed to pass through any cross section. The flow conditions can be assumed to be steady state. If the coefficient of permeability of Soil 1 is 0.02 mm/s, the coefficient of permeability of Soil 2 (expressed in mm/s) would be ____

A. 0.05 **B. 0.05** **C. 0.045** **D. 0.06**

Q.24. A square plate is suspended vertically from one of its edges using a hinge support as shown in figure. A water jet of 20 mm diameter having a velocity of 10 m/s strikes the plate at its mid-point, at an angle of 30 ° with the vertical. Consider g as 9.81 m/s2 and neglect the self-weight of the plate. The force F (expressed in N) required to keep the plate in its vertical position is

_____

A. 7.85

B. 8.8

C. 7.63

D. 0.763

Q.25. The ordinates of a one-hour unit hydrograph at sixty minute interval are 0, 3, 12, 8, 6, 3 and 0 m3/s. A two-hour storm of 4 cm excess rainfall occurred in the basin from 10 AM. Considering constant base flow of 20m3/s, the flow of the river (expressed in m3/s) at 1 PM is_____

A. 40

B. 60

C. 20

D. 10

Q.26. A 3m wide rectangular channel carries a flow of 6m3/s. The depth of flow at a section P is 0.5 m. A flat-topped hump is to be placed at the downstream of the section P. Assume negligible energy loss between section P and hump, and consider gg as 9.81 m/s2. The maximum height of the hump (expressed in m) which will not change the depth of flow at section P is

_____

A. 0.205

B. 0.85

C. 0.35

D. 0.705

Q.27. For a wastewater sample, the three-day biochemical oxygen demand at incubation temperature of 20 °C (BOD3day, 20 °C) is estimated as 200 mg/L. Taking the value of the first order BOD reaction rate constant as 0.22 day-1, the five-day BOD (expressed in mg/L) of the wastewater at incubation temperature of 20 °C (BOD5day, 20 °c) would be _____

A. 276.16
B. 265.2
C. 413.95
D. 224

Q.28. The critical flow ratios for a three-phase signal are found to be 0.30, 0.25, and 0.25. The total time lost in the cycle is 10 s. Pedestrian crossings at this junction are not significant. The respective Green times (expressed in seconds and rounded off to the nearest integer) for the three phases are

A. 34, 28, and 28
B. 40, 25, and 25
C. 40, 30, and 30
D. 50, 25, and 25

Q.29. A tall tower was photographed from an elevation of 700 m above the datum. The radial distances of the top and bottom of the tower from the principal points are 112.50 mm and 82.40 mm, respectively. If the bottom of the tower is at an elevation 250 m above the datum, then the height (expressed in m) of the tower is _____.

A. 120.4

B. 100.8

C. 50.4

D. 60.2

Q.30. A motorist travelling at 100 km/h on a highway needs to take the next exit, which has a speed limit of 50 km/h. The section of the roadway before the ramp entry has a downgrade of 3% and coefficient of friction (f) is 0.35. In order to enter the ramp at the maximum allowable speed limit, the braking distance (expressed in m) from the exit ramp is _____

A. 92.14
B. 82.24
C. 60.89
D. 41.5

Q.31. A uniformly distributed line load of 500 kN/m is acting on the ground surface. Based on Boussinesq's theory, the ratio of vertical stress at a depth 2 m to that at 4 m, right below theline of loading, is

A. 0.25
B. 0.5
C. 2.0
D. 4.0

Q.32. The number of parameters in the univariate exponential and Gaussian distributions, respectively, are

A. 2 and 2
B. 1 and 2
C. 2 and 1
D. 1 and 1

Q.33. Vehicles arriving at an intersection from one of the approach road follow the Poisson distribution. The mean rate of arrival is 900 vehicles per hour. If a gap is defined as the time difference between two successive vehicle arrivals (with vehicles assumed to be points), the probability (up to four decimal places) that the gap is greater than 8 seconds is _____

A. 0.4432
B. 0.5345
C. 0.2345

D. 0.1354

Q.34. A pre-tensioned rectangular concrete beam 150 mm wide and 300 mm depth is prestressed with three straight tendons, each having a cross-sectional area of 50 mm2, to an initial stress of . The tendons are located at 100 mm from the soffit of the beam. If the modularratio is 6, the loss of prestressing force (in kN, up to one decimal place) due to the elastic deformation of concrete only is _____ 2 1200/ N mm

A. 4.0
B. 2.0
C. 2.8
D. 4.8

Q.35. A consolidated undrained triaxial compression test is conducted on a normally consolidated clay at a confining pressure of 100 kPa. The deviator stress at failure is 80 kPa, and the pore-water pressure measured at failure is 50 kPa. The effective angle of internalfriction (in degrees, up to one decimal place) of the soil is _____ CU

A. 26.4
B. 48
C. 58.193
D. 45

Q.36. The following observations are made while testing aggregate for its suitability in pavement
Construction:
i. Mass of oven-dry aggregate in air = 1000 g
ii. Mass of saturated surface-dry aggregate in air = 1025 g
iii. Mass of saturated surface-dry aggregate under water = 625 g Based on the above observations, the correct statement is

A. bulk specific gravity of aggregate = 2.5 and water absorption = 2.5 %
B. bulk specific gravity of aggregate = 2.5 and water absorption = 2.4 %
C. apparent specific gravity of aggregate = 2.5 and water absorption=2.5%
D. apparent specific gravity of aggregate = 2.5 and water absorption=2.4 %

Q.37. Consider the following sentences:

All benches are beds. No bed is a bulb. Some bulbs are lamps.
Which of the following can be inferred?
i. Some beds are lamps.
ii. Some lamps are beds.

A. Only i

B. Only ii

C. Both i and ii

D. Neither i nor ii

Q.38. The safety within a roundabout and the efficiency of a roundabout can be increased, respectively, by

A. increasing the entry radius and increasing the exit radius
B. increasing the entry radius and decreasing the exit radius
C. decreasing the entry radius and increasing the exit radius
D. decreasing the entry radius and decreasing the exit radius

Q.39. The VPI (vertical point of intersection) is 100 m away (when measured along the horizontal) from the VPC (vertical point of curvature). If the vertical curve is parabolic, the length of the curve (in meters and measured along the horizontal) is_____

A. **200**
B. 100
C. 150
D. 50

Q.40. For a construction project. The mean and standard deviation of the completion time are 200 days and 6.1 days, respectively. Assume normal distribution and use the value of standard normal deviate Z = 1.64 for the 95% confidence level. The maximum time required (in days) for the completion of the project would be _____

A. 211

B. 206

C. 207

D. 210

Q.41. Given that the scope of the construction work is well-defined with all its drawings, specifications, quantities and estimates, which one of the following types of contract would be most preferred?

A. **EPC contract**

B. **Percentage rate contract**

C. **Item rate contract**

D. **Lump sum contract**

Q.42. The following system of wheel loads crosses a span of 25m from left to right with 20 KN as leading load.

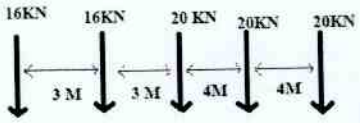

Find the maximum value of bending moment and shearing force in the span.

Q.43. Determine by Castiglione's method, the vertical deflection and horizontal deflection at the free end C of a cantilever bend ABC having vertical leg AB of length L and horizontal leg of BC of length L/2.End A is bottom end which is fixed support, B is rigid joint and end C is free. There is a vertically downward load W at the free end C. Flexural rigidity EI is constant throughout.

Q.44. Four wheel loads of 6KN, 4KN, 8KN and 5KN cross a girder of 20m span, from left to right followed by U.D.L of 4kN/m and 4m long with 6kN load leading .The spacing between the loads in the same order are 3m, 2m, and 2m.the head of the U.D.L. is at 2m from the last 5KN Load. Using influence lines, calculate the S.F. And B.M. at a section 8m from the left support when the 4KN load is at center of the span.

Q.45. Determine by Castiglione's method of strain energy, the vertical deflection of mid-point C of a simply supported beam AB heaving length L. When a Point load W acting at mid span at point C. Moment of inertia of beam section varies I at the ends & 1.5I at the center of the beam. E is constant.

Q.46. A 30m long tape was standardized at a temperature of 27°C and pull of 20kg. If measurment of one chain length is taken at 32°C at a pull of 36kg. The area of the cross section of the tape is $0.3cm^2$ and cofficeint of thermal expansion is $11.6x\ 10^{-6}$ per °C and weight of tape (w)is 30gm/m'. If the modulus of elasticity of tape material is $2.06x\ 10^5\ N/mm^2$.Find the correction required due to temprature,pull and sag.

Q.47. A 20m long tape was standardized at a temperature of 18°C and pull of 19kg. The tape was used to measure a survey line and the distance was found to be 612.6m. The pull applied at field was 14 kg and the mean temperature of the day was recorded as 32°C. The area of the cross section of the tape is $0.0725cm^2$ and cofficeint of thermal expansion is $9.4 \times 10^{--6}$ per °C. For first 300m the slope was 3°15', for next 200m distance the slope was 2°6' and for the remaining distance the slope was 6°8'. If the modulus of elasticity of tape material is $2.06 \times 10^5 N/mm^2$, find the actual distance of the survey line.

Q.48. In a closed travese, the following bearings were obsereved with a compass. Calculate their interior angles and then compute the corrected magnetic bearings:

Line	Fore Bearing	Back Bearing
AB	46° 30'	226° 30'
BC	118° 30'	300° 15'
CD	210° 00'	28° 00'
DE	271° 15'	93° 15'
EA	313° 45'	132° 00'

Q.49. In a closed travese, the following bearings were obsereved, with a compass. Calculate their interior angles .

Line	Fore Bearing
AB	40°
BC	70°
CD	210°

DE	280°

Q.50. The following readings are taken from a level: 0.502m,1.335m, 1.865m,2.555m,0.305m,0.910m,1.935m,2.875m,0.560m,1.825m, and 2.775m.Instrument was shifted after 2 ,4 , and 9th reading . compute the reduced level of all stations using rise and fall method. The first reading was taken on B.M. of 100m.

Q.51. The following readings are taken from a level: 0.402m,1.185m, 0.855m,1.125m,0.305m,0.610m,1.955m,1.875m,0.960m,2.125m, and 2.775m.Instrument was shifted after 3 ,5, and 8th reading . compute the reduced level of all stations using Height of Instrument method. The first reading was taken on B.M. of 110m.

ECE

GATE Qualified students 2019-20

Sr. No.	Student Name	Branch	Category	GATE Registration Number	Registration Fee Amount	Qualify Gate (Yes/No)	Marks Obtained	Aadhar No.
1	Tanu Shree Gothwal	ECE	OBC	EC20S43020093	750	Yes	37.67	708105499216
2	Gopal Gupta	ECE	GEN	EC20S43017166	1500	Yes	36.67	442989954946

GATE Qualified students 2019-20

Sr. No.	Student Name	Branch	Category	GATE Registration Number	Registration Fee Amount	Qualify Gate (Yes/No)	Marks Obtained	Aadhar No.
1	Tanu Shree Gothwal	ECE	OBC	EC20S43020093	750	Yes	37.67	708105499216
2	Gopal Gupta	ECE	GEN	EC20S43017166	1500	Yes	36.67	442989954946

Important information regarding GATE section

As discussed with Prof. Dr. S.K.Bhatnagar (HoD, ECE), I would like to share some decisions that were being taken related to Gate section (Section-A) of IIIrd and Vth semester.

1. All the faculties who are taking classes in GATE section will ~~have to~~ prepare a tutorial sheet which will consist of minimum 10 questions that were being asked in the Competitive exams like GATE and IES.

2. Questions can be subjective or objective type. Also specify the year at the end of each question in which it was asked.

2. Faculties will mail this sheet to all the students.

3. One hardcopy of tutorial sheets will be submitted to the GATE Coordinator along with its answer key.

4. The tutorial sheet of each subject should be prepared and mailed weekly (preferably by Saturday of every week).

5. Students can ask their doubts and queries related to these sheets in the Library period assigned to them or in the last minutes of the lecture.

Concerned faculties:

IIIrd Sem

S.No.	Subject	Faculty	Signature
1.	Electronic Devices	Ms. Namrata Joshi	
2.	Signals and Systems	Mr. Ravi Jangir	
3.	Digital System Design	Mr. Neeraj Jain	
4.	Network Theory	Mr. Sunil Lakhawat	

Vth Sem

S.No.	Subject	Faculty	Signature
1.	Electromagnetic Waves	Dr. Praveen Kumar Jain	
2.	Control system	Mr. Rahul Pandey	
3.	Microwave theory and techniques	Dr. Shubhi Jain	
4.	Digital Signal processing	Dr. Rukhsar Zafar	

SKB 4/8/19
HoD

Richa Sharma
(GATE Coordinator)

GATE Syllabus

EC	Electronics and Communications Engineering

Section 1: Engineering Mathematics

Linear Algebra: Vector space, basis, linear dependence and independence, matrix algebra, eigen values and eigen vectors, rank, solution of linear equations – existence and uniqueness.

Calculus: Mean value theorems, theorems of integral calculus, evaluation of definite and improper integrals, partial derivatives, maxima and minima, multiple integrals, line, surface and volume integrals, Taylor series.

Differential Equations: First order equations (linear and nonlinear), higher order linear differential equations, Cauchy's and Euler's equations, methods of solution using variation of parameters, complementary function and particular integral, partial differential equations, variable separable method, initial and boundary value problems.

Vector Analysis: Vectors in plane and space, vector operations, gradient, divergence and curl, Gauss's, Green's and Stoke's theorems.

Complex Analysis: Analytic functions, Cauchy's integral theorem, Cauchy's integral formula; Taylor's and Laurent's series, residue theorem.

Numerical Methods: Solution of nonlinear equations, single and multi-step methods for differential equations, convergence criteria.

Probability and Statistics: Mean, median, mode and standard deviation; combinatorial probability, probability distribution functions - binomial, Poisson, exponential and normal; Joint and conditional probability; Correlation and regression analysis.

Section 2: Networks, Signals and Systems

Network solution methods: nodal and mesh analysis; Network theorems: superposition, Thevenin and Norton's, maximum power transfer; Wye-Delta transformation; Steady state sinusoidal analysis using phasors; Time domain analysis of simple linear circuits; Solution of network equations using Laplace transform; Frequency domain analysis of RLC circuits; Linear 2-port network parameters: driving point and transfer functions; State equations for networks.

Continuous-time signals: Fourier series and Fourier transform representations, sampling theorem and applications; Discrete-time signals: discrete-time Fourier transform (DTFT), DFT, FFT, Z-transform, interpolation of discrete-time signals; LTI systems: definition and properties, causality, stability, impulse response, convolution, poles and zeros, parallel and cascade structure, frequency response, group delay, phase delay, digital filter design techniques.

Section 3: Electronic Devices

Energy bands in intrinsic and extrinsic silicon; Carrier transport: diffusion current, drift current, mobility and resistivity; Generation and recombination of carriers; Poisson and continuity equations; P-N junction, Zener diode, BJT, MOS capacitor, MOSFET, LED, photo diode and solar cell; Integrated circuit fabrication process: oxidation, diffusion, ion implantation, photolithography and twin-tub CMOS process.

Section 4: Analog Circuits

Small signal equivalent circuits of diodes, BJTs and MOSFETs; Simple diode circuits: clipping, clamping and rectifiers; Single-stage BJT and MOSFET amplifiers: biasing, bias stability, mid-frequency small signal analysis and frequency response; BJT and MOSFET amplifiers: multi-stage, differential, feedback, power and operational; Simple op-amp circuits; Active filters; Sinusoidal oscillators: criterion for oscillation, single-transistor and op-amp configurations; Function generators, wave-shaping circuits and 555 timers; Voltage reference circuits; Power supplies: ripple removal and regulation.

Section 5: Digital Circuits

Number systems; Combinatorial circuits: Boolean algebra, minimization of functions using Boolean identities and Karnaugh map, logic gates and their static CMOS implementations, arithmetic circuits, code converters, multiplexers, decoders and PLAs; Sequential circuits: latches and flip-flops, counters, shift-registers and finite state machines; Data converters: sample and hold circuits, ADCs and DACs; Semiconductor memories: ROM, SRAM, DRAM; 8-bit microprocessor (8085): architecture, programming, memory and I/O interfacing.

Section 6: Control Systems

Basic control system components; Feedback principle; Transfer function; Block diagram representation; Signal flow graph; Transient and steady-state analysis of LTI systems; Frequency response; Routh-Hurwitz and Nyquist stability criteria; Bode and root-locus plots; Lag, lead and lag-lead compensation; State variable model and solution of state equation of LTI systems.

Section 7: Communications

Random processes: autocorrelation and power spectral density, properties of white noise, filtering of random signals through LTI systems; Analog communications: amplitude modulation and demodulation, angle modulation and demodulation, spectra of AM and FM, superheterodyne receivers, circuits for analog communications; Information theory: entropy, mutual information and channel capacity theorem; Digital communications: PCM, DPCM, digital modulation schemes, amplitude, phase and frequency shift keying (ASK, PSK, FSK), QAM, MAP and ML decoding, matched filter receiver, calculation of bandwidth, SNR and BER for digital modulation; Fundamentals of error correction, Hamming codes; Timing and frequency synchronization, inter-symbol interference and its mitigation; Basics of TDMA, FDMA and CDMA.

Section 8: Electromagnetics

Electrostatics; Maxwell's equations: differential and integral forms and their interpretation, boundary conditions, wave equation, Poynting vector; Plane waves and properties: reflection and refraction, polarization, phase and group velocity, propagation through various media, skin depth; Transmission lines: equations, characteristic impedance, impedance matching, impedance transformation, S-parameters, Smith chart; Waveguides: modes, boundary conditions, cut-off frequencies, dispersion relations; Antennas: antenna types, radiation pattern, gain and directivity, return loss, antenna arrays; Basics of radar; Light propagation in optical fibers.

SKIT JAIPUR (Odd Semester 2019-20)

ELectronics and Communication Department

III EC -A

skit

	1 08:00 - 09:00	2 09:00 - 10:00	3 10:00 - 11:00	4 11:00 - 11:30	5 11:30 - 12:30	6 12:30 - 01:30	7 01:30 - 02:30
Mo	NAM ED L-101	ECL-18 SW/NP AG-1 SJ ECL-07 DSD Lab AG-2 NJ ECL-01 CP Lab-I AG-3 AJ		Lunch	SG AEM-I L-101	SL NT L-101	LG TC L-101
Tu	NJ DSD L-101	SG AEM-I L-101	RJ SS L-101	Lunch	LIBRARY AG-1 NJ NT AG-2 SL L-101 ED AG-3 NAM	ECL-16 SP Lab AG-1 RJ ECL-11 ED Lab AG-2 NAM ECL-18 SW/NP AG-3 SL	
We	SL NT L-101	ECL-01 CP Lab-I AG-1 LKL ECL-18 VL/ST AG-2 PRI ECL-11 ED Lab AG-3 NAM		Lunch	RJ SS L-101	WDA	
Th	NAM ED L-101	RJ SS L-101	L-101 NT AG-1 SL L-102 ED AG-2 NAM LIBRARY AG-3 NJ	Lunch	NJ DSD L-101	ECL-18 VL/ST AG-1 PRI ECL-16 SP Lab AG-2 RJ ECL-07 DSD Lab AG-3 SL	
Fr	LG TC L-101	ECL-07 DSD Lab AG-1 NJ SW/NP AG-2 LKL ECL-18 VL/ST AG-3 PRI		Lunch	SG AEM-I L-101	SL NT L-101	L-102 ED AG-1 NAM LIBRARY AG-2 NJ L-101 NT AG-3 SL
Sa	SG AEM-I L-101	ECL-11 ED Lab AG-1 NAM ECL-01 CP Lab-I AG-2 LKL ECL-16 SP Lab AG-3 RJ		Lunch	NAM ED L-101	NJ DSD L-101	SKB IN.T S. Hall

Timetable generated: 7/12/2019

aSc Timetables

Teachers:

AJ - Abhinandan Jain
LG - Lalit Gahlot
LKL - Lalit Kumar Lata
NAM - Namrta Joshi
NJ - Neeraj Jain
PRI - Priyanka Sharma
RJ - Ravi Jangir
SG - Sangeeta Gupta
SJ - Shubhi Jain
SKB - Prof. S. K. Bhatnagar
SL - Sunil Lakhwat

Subjects:

AEM-I - 3 EC2-01 Advanced Engineering Mathematics
CP Lab-I - 3EC3-24 Computer Programming Lab-I
DSD - 3EC4-04 Digital System Design
ED Lab - 3EC4-21 Electronics Devices Lab
ED - 3EC4-07 Electronics Devices
DSD Lab - 3EC4-22 Digital System Design Lab
IN.T - 3EC7-30 Industrial Training
LIBRARY - LIBRARY
Lunch - LUNCH
NT - 3EC4-06 Network Thoeory
SP Lab - 3EC3-23 Signal Processing Lab
SS - 3 EC4-05 Signals and Systems
SW/NP - Swayam/NPTEL
TC - 3EC1-02 Technical Communication
VL/ST - Virtual Lab+Spoken Tutorial
WDA - Wednes Day Activity

SKIT JAIPUR (Odd Semester 2019-20)

ELectronics and Communication Department

V EC-A

skit

	1 08:00 - 09:00	2 09:00 - 10:00	3 10:00 - 11:00	4 11:00 - 11:30	5 11:30 - 12:30	6 12:30 - 1:30	7 1:30 - 2:30
Mo	SJ 5EC5 MTT L-103	SL CRT L-103		Lunch	ECL-17 5EC8 DSP Lab AG-1 RZ ECL-10 5EC9 MW Lab AG-2 HN ECL-01 5EC7 RFS Lab AG-3 PR		L-103 5EC1 EW AG-3 LKL
Tu	ECL-01 5EC7 RFS Lab AG-1 PR ECL-16 5EC8 DSP Lab AG-2 RZ ECL-10 5EC9 MW Lab AG-3 HN		L-103 5EC1 EW AG-1 LKL	Lunch	RZ 5EC4 DSP L-103	PRI 5EC6 ES L-103	LKL 5EC1 EW L-103
We	LKL 5EC1 EW L-103	SL CRT L-103		Lunch	RP 5EC3 CS L-103	WDA	
Th	SJ 5EC5 MTT L-103	PRI 5EC6 ES L-103	RZ 5EC4 DSP L-103	Lunch	MC 5EC2 CA L-103	RP LIBRARY	RP 5EC3 CS L-103
Fr	LKL 5EC1 EW L-103	SL CRT L-103		Lunch	SJ 5EC5 MTT L-103	RZ 5EC4 DSP L-103	RP 5EC3 CS L-103
Sa	MC 5EC2 CA L-103	PRI 5EC6 ES L-103	MC LIBRARY	Lunch	ECL-10 5EC9 MW Lab AG-1 HN ECL-01 5EC7 RFS Lab AG-2 PR ECL-17 5EC8 DSP Lab AG-3 RZ		L-103 5EC1 EW AG-2 LKL

Timetable generated: 7/12/2019 aSc Timetables

Teachers:

HN - Harshal Nigam
LKL - Lalit Kumar Lata
MC - Manju Choudhary
PRI - Priyanka Sharma
PR - Pallav Rawal
RP - Rahul Pandey
RZ - Dr. Rukhsar Zafar
SJ - Shubhi Jain
SL - Sunil Lakhwat

Subjects:

5EC1 EW - Electromagnetic Waves
5EC2 CA - Computer Architecture
5EC3 CS - Control System
5EC4 DSP - Digital Signal Processing
5EC5 MTT - Microwave Theory and Techniques
5EC6 ES - Embedded Systems
5EC7 RFS Lab - RF Simulation Lab
5EC8 DSP Lab - Digital Signal Processing Lab
5EC9 MW Lab - Microwave Lab
CRT - CRT
LIBRARY - LIBRARY
Lunch - LUNCH
WDA - Wednes Day Activity

SKIT M&G			
III SEM (II YEAR)		SESSION : 2019-20	
SECTION-A			
ECE			
SN	EXAM ROLL NO	NAME OF STUDENT	
1	18ESKEC003	ABHISHEK JAIN	
2	18ESKEC005	ADITI PRIYA	
3	18ESKEC007	AKASH CHANDEL	
4	18ESKEC008	AKSHAT JAIN	
5	18ESKEC009	AMAN BAHETI	
6	18ESKEC011	AMIT KUMAR GODARA	
7	18ESKEC012	AMIT LAWANIYA	
8	18ESKEC015	ANSHU VERMA	
9	18ESKEC016	ASHISH MAHESHWARI	
10	18ESKEC018	ASHWANI MALAV	
11	18ESKEC019	AYUSH JANGIR	G1
12	18ESKEC020	AYUSHI GARG	
13	18ESKEC023	BHAVYA BHATNAGAR	
14	18ESKEC024	BHAVYA KHATRI	
15	18ESKEC025	BHUSHAN AMETA	
16	18ESKEC026	BRIJ KISHORE SHARMA	
17	18ESKEC028	DAKSH SHARMA	
18	18ESKEC029	DEVANSHU JANGID	
19	18ESKEC032	FAISAL KHAN	
20	18ESKEC033	GUNJAN GUPTA	
21	18ESKEC034	HARSH KANOJIA	
22	18ESKEC035	HIMANI DEVI	
23	18ESKEC036	ISHITA VAID	
24	18ESKEC037	JYOTI SHARMA	
25	18ESKEC038	KHUSHWANT PANWAR	
26	18ESKEC039	KIRAN SOLANKI	
27	18ESKEC043	LAKSHYA GUPTA	
28	18ESKEC044	MAHARSHI BHATNAGAR	
29	18ESKEC045	MAHIMA DARIYANI	
30	18ESKEC046	MAHIMA SHARMA	
31	18ESKEC047	MANAN SHARMA	
32	18ESKEC050	MUDIT KUKRETI	
33	18ESKEC051	NAKSHATRA BHARDWAJ	G2
34	18ESKEC053	NITIN CHITTORIA	
35	18ESKEC054	PARTH BHANDARI	
36	18ESKEC055	PIYUSH GUPTA	
37	18ESKEC056	POOJA CHAUDHARY	
38	18ESKEC061	RAJEEV SHARMA	
39	18ESKEC062	RAJESH KUMAR	
40	18ESKEC063	RAKESH SINGH	
41	18ESKEC065	RITIKA AGARWAL	
42	18ESKEC066	SABHYATA AGARWAL	
43	18ESKEC068	SANGEETA SHARMA	
44	18ESKEC069	SAUMYA GAUTAM	

SK. Bhatnagar
9/7/19

Section-A (continued...)

45	18ESKEC070	SHASHANK PANDIYA	
46	18ESKEC071	SHIVAM KUMAR GAUR	
47	18ESKEC073	SHUBHAM UDSARIA	
48	18ESKEC074	SHUBHI SAMARIA	
49	18ESKEC075	SIDDHARTH RAWAT	
50	18ESKEC076	SONU SAINI	
51	18ESKEC078	SOURAV SONI	
52	18ESKEC079	UDYAN SRIVASTAVA	
53	18ESKEC080	UJALA JHANWAR	
54	18ESKEC082	VIBHU MATHUR	
55	18ESKEC084	VIDUSHI PAREEK	
56	18ESKEC086	VIPUL GUPTA	G3
57	18ESKEC087	VIRENDRA SINGH RATHORE	
58	18ESKEC088	VISHAL SEN	
59	18ESKEC089	YASH SAXENA	
60	18ESKEC707	ARNAV RAJORIA	
61	18ESKEC712	DEEPAK SHARMA	
62	18ESKEC717	GORAKH GUPTA	
63	18ESKEC720	HIMANSHU SHEKHAR	
64	18ESKEC732	NITESH SHARMA	
65	18ESKEC733	PARIKSHIT RATHORE	
66	18ESKEC735	PRAVEEN KUMAR	
67	18ESKEC740	RUCHI KUMARI	

S.K. Shatrocgx
9/7/19.

SKIT M&G			
V SEM (III YEAR)		SESSION : 2019-20	
SECTION-A			
ECE			
SN	EXAM ROLL NO	NAME OF STUDENT	
1	17ESKEC001	AADARSH SINGH MERTIA	G1
2	17ESKEC002	ADITYA CHOUDHARY	
3	17ESKEC004	AKSHAT GUPTA	
4	17ESKEC005	AKSHIT SAXENA	
5	17ESKEC007	ANANYA TIWARI	
6	17ESKEC008	ANIKET RATHI	
7	17ESKEC009	ANJALI JAIN	
8	17ESKEC010	ANJALI PARIK	
9	17ESKEC011	ANJU CHOUDHARY	
10	17ESKEC012	ANSH GARG	
11	17ESKEC013	APARNA MALETI	
12	17ESKEC014	ARPIT AGARWAL	
13	17ESKEC016	AVI VANAWAT	
14	17ESKEC017	AYUSH PARASRAMPURIA	
15	17ESKEC018	BHARAT SINGH	G2
16	17ESKEC019	BHUNESH KUMAR	
17	17ESKEC020	BRIJBHUSHAN	
18	17ESKEC021	CHARU SHUKLA	
19	17ESKEC024	CHINMAY SHARMA	
20	17ESKEC026	DEVANG AGRAWAL	
21	17ESKEC029	GARGI SHARMA	
22	17ESKEC030	HARSH KHANDELWAL	
23	17ESKEC031	HIMANSHU BAIRWA	
24	17ESKEC032	ISHAN RAJVANSHI	
25	17ESKEC033	JATIN BHANDARI	
26	17ESKEC036	KASHISH SHARMA	
27	17ESKEC037	KINJALK SHARMA	
28	17ESKEC038	KOUSTOOBH PAREEK	
29	17ESKEC040	MANJU CHOUDHARY	G3
30	17ESKEC041	MANVENDRA SHEKHAWAT	
31	17ESKEC043	MAYANK JAIN	
32	17ESKEC044	MAYANK SHRIMALI	
33	17ESKEC046	MONALISA	
34	17ESKEC048	NIKITA MODI	
35	17ESKEC049	PADMAKSHI JAIN	
36	17ESKEC050	PARUL SINHA	
37	17ESKEC053	PRIYANKA JAIN	
38	17ESKEC054	PUNEET MATHUR	
39	17ESKEC059	RAJKUMAR VERMA	
40	17ESKEC068	SHIVANI PRIYADARSHANI	
41	17ESKEC071	SRASHTI SHARMA	
42	17ESKEC725	VAIBHAV SINGH CHOUHAN	

Yes.
Mukesh.
22.7.19

1. Let the input be u and the output be y of a system, and the other parameters are real constants. Identify which among the following systems is not a linear system:

[Gate 2018]

(A) $\frac{d^3y}{dt^3}+a_1\frac{d^2y}{dt^2}+a_2\frac{dy}{dt}+a_3y=b_3u+b_2\frac{du}{dt}+b_1\frac{d^2u}{dt^2}$ (with initial rest conditions)

(B) $y(t)=\int_0^t e^{a(t-\tau)}\beta u(\tau)\,d\tau$

(C) y = au + b, b $\neq$ 0

(D) y = au

2. A function is given by f(t) = $\sin^2 t + \cos 2t$ Which of the following is true? [Gate 2010]

(A) f has frequency components at 0 and $1/2\pi$ Hz

(B) f has frequency components at 0 and $1/\pi$ Hz

(C) f has frequency components at $1/2\pi$ and $1/\pi$ Hz

(D) f has frequency components at 0, $1/2\pi$ and $1/\pi$ Hz

3. The input x(t) and the output y(t) of a continuous time system are related as

$$y(t)=\int_{t-T}^{t} x(u)\,du$$

The system is: [Gate 2017]

(A) Linear and time variant

(B) linear and time invariant

(C) non linear and time variant

(D) nonlinear and time invariant

4. Consider the following statements for continuous-time linear time invariant (LTI) system.
I. There is no bounded input bounded output (BIBO) stable system with a pole in the right half of the complex plane.
II. There is no causal and BIBO stable system with a pole in the right half of the complex plane.
Which one among the following is correct? [Gate 2017]

(A) Both I and II are true

(B) Both I and II are not true

(C) Only I is true

(D) Only II is true

5. The impulse response of an LTI system can be obtained by:

[Gate 2015]

(A) differentiating the unit ramp response

(B) differentiating the unit step response

(C) integrating the unit ramp response

(D) integrating the unit step response

6. The result of the convolution x(−t)*δ(−t−t0) is: [Gate 2015]

(A) $x(t+t_0)$

(B) $x(t-t_0)$

(C) $x(-t+t_0)$

(D) $x(-t-t_0)$

7. Two system with impulse responses $h_1(t)$ and $h_2(t)$ are connected in cascade. Then the overall impulse response of the cascaded system is given by: [Gate 2013]

(A) Product of $h_1(t)$ and $h_2(t)$.

(B) Sum of $h_1(t)$ and $h_2(t)$.

(C) Convolution of $h_1(t)$ and $h_2(t)$.

(D) Subtraction of $h_1(t)$ and $h_2(t)$

8. The impulse response of a system is h(t) = t u(t). For an input u(t - 1), the output is: [Gate 2013]

(A) $\frac{t^2}{2}u(t)$

(B) $\frac{t(t-1)}{2}u(t-1)$

(C) $\frac{(t-1)^2}{2}u(t-1)$

(D) $\frac{t^2-1}{2}u(t-1)$

9. The input and output of a continuous system are respectively denoted by x(t) and y(t). Which of the following descriptions corresponds to a causal system? [Gate 2008]

(A) $y(t) = x(t-2) + x(t+4)$

(B) $y(t) = (t-4)\,x(t+1)$

(C) $y(t) = (t+4)\,x(t-1)$

(D) $y(t) = (t+5)\,x(t+5)$

10. The impulse response h(t) of a linear time-invariant continuous time system is described by h(t)=exp(αt)u(t)+exp(βt)u(−t), where u(t) denotes the unit step function, and α and β are real constants. This system is stable if: [Gate 2008]

(A) α is positive and β is positive

(B) α is negative and β is negative

(C) α is positive and β is negative

(D) α is negative and β is positive

1. Let x(t) be the input to a linear, time-invariant system. The required output is 4x(t - 2). The transfer function of the system should be: [Gate 2003]

   (A) $4e^{j4\pi f}$

   (B) $2e^{-j8\pi f}$

   (C) $4e^{-j4\pi f}$

   (D) $2e^{j8\pi f}$

2. Convolution of x(t + 5) with impulse function δ(t−7)δ(t−7) is equal to [Gate 2002]

   (A) $x(t-12)$

   (B) $x(t+12)$

   (C) $x(t-2)$

   (D) $x(t+2)$

3. Consider a single input single output discrete-time system with h[n]h[n] as input and y[n]y[n] as output, where the two are related as: [Gate 2017]

$$y[n] = \begin{cases} n\,|x[n]|, & for\ 0 \le n \le 10 \\ x[n] - x[n-1], & otherwise, \end{cases}$$

   Which one of the following statements is true about the system?

   (A) It is causal and stable

   (B) It is causal but not stable

   (C) It is not causal but stable

   (D) It is neither causal nor stable

4. A system is defined by its impulse response $h(n)=2^n u(n-2)$. The system is [Gate 2011]

   (A) stable and causal

   (B) causal but not stable.

   (C) stable but not causal.

   (D) unstable and non causal.

5. The Fourier transform G(ω)G(ω) of the signal g(t) in Fig.(1) is given as

$$G(\omega) = \frac{1}{\omega^2}\left(e^{j\omega} - j\omega e^{j\omega} - 1\right).$$

[Gate 2001]

Using this information, and the time-shifting and time-scaling properties, determine and Fourier transform of signals in Fig (2),

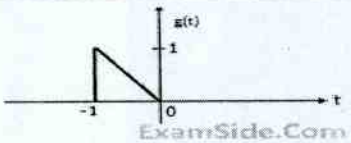

Fig.(1)

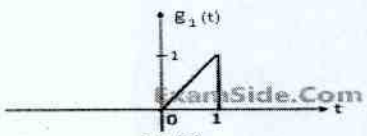

Fig.(2)

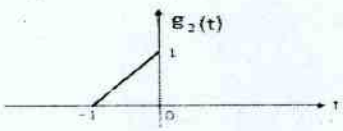

Fig. (3)

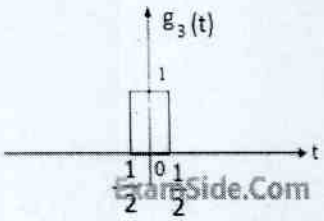

Fig.(4)

$G_2(\omega) = \frac{1}{\omega^2}\left[1 + j\omega - e^{j\omega}\right]$

6. [Gate 2004]

For a function g(t), it is given that $\int_{-\infty}^{\infty} g(t)e^{-j\omega t}dt = \omega e^{-2\omega^2}$ for any real value ω. If $y(t)=\int_{-\infty}^{t} g(\tau)d\tau$, then $\int_{-\infty}^{\infty} y(t)\,dt$ is

(A) 0

(B) $-j$

(C) $-\frac{j}{2}$

(D) $\frac{j}{2}$

7. Let $x(t)$ be a periodic function with period $T = 10$. The Fourier series coefficients for this series are denoted by a_k, that is

$$x(t) = \sum_{k=-\infty}^{\infty} a_k e^{jk\frac{2\pi}{T}t}$$

The same function $x(t)$ can also be considered as a periodic function with period T' = 40. Let b_k be the Fourier series coefficients when period is taken as T'. If GATE 2018

$\sum_{k=-\infty}^{\infty} |a_k| = 16$, then $\sum_{k=-\infty}^{\infty} |b_k| = 16$ is equal to

(A) 256

(B) 64

(C) 16

(D) 4

8. A periodic signal x(t) has a trigonometric Fourier series expansion GATE 2017

$$x(t) = a_0 + \sum_{n=1}^{\infty} (a_n \cos n\omega_0 t + b_n \sin n\omega_0 t)$$

If $x(t) = -x(-t) = -x(t - \pi/\omega_0)$, we can conclude that

(A) a_n are zero for all n and b_n are zero for n even

(B) a_n are zero for all n and b_n are zero for n odd

(C) a_n are zero for n even and b_n are zero for n odd

(D) a_n are zero for n odd and b_n are zero for n even

9. Which of the following signals is/are not periodic? [Gate 1992]

(A) S (t) = cos2t + cos3t + cos5t

(B) S (t) = exp (j8πt)

(C) S (t) = exp (−7t) sin10πt

(D) S (t) = cos2t cos 4t

Name: Roll No.:

Class: III SEM-A Tutorial Sheet-1 Subject: ED

1. A P-type silicon sample has higher conductivity compared to an n-type silicon sample having the same dopant concentration. TRUE/FALSE **[GATE 1994: 1 Mark]**
2. At T = 300 K, the hole mobility of a semiconductor μp = 500 $cm2\ /V-s$ and kT/q = $26mV$. The hole diffusion constant $Dpincm2\ /s$ is: **[GATE 2014: 1 Mark]**

3. A thin P – type silicon sample is uniformly illuminated with light which generates excess carriers. The recombination rate is directly proportional to
   (a) The minority carrier mobility (b)The minority carrier recombination lifetime
   (c) The majority carrier concentration (d)The excess minority carrier concentration
   [GATE 2014: 1 Mark]
4. Drift current in semiconductors depends upon
   (a) Only the electric field (b)Only the carrier concentration gradient
   (c) Both the electric field and the carrier concentration
   (d)Neither the electric field nor the carrier concentration gradient **[GATE 2011: 1 Mark]**

5. A silicon bar is doped with donor impurities N_D = 2.25 × 1015 $atoms/\ cm^3$. Given the intrinsic carrier concentration of silicon at T = 300°K is ni = 1.5 × 1010 $cm{-}^3$. Assuming complete impurity ionization, the equilibrium electron and hole concentrations are
   (a) $n0$ = 1.5 × 1016 $cm{-}3$,$p0$ = 1.5 × 105 $cm{-}3$
   (b)$n0$ = 1.5 × 1010 $cm{-}3$,$p0$ = 1.5 × 1015 $cm{-}3$
   (c) $n0$ = 2.25 × 1015 $cm{-}3$,$p0$ = 1.5 × 1010 $cm{-}3$
   (d)$n0$ = 2.25 × 1015 $cm{-}3$,$p0$ = 1 × 105 $cm{-}3$ **[GATE 2014: 1 Mark]**

6. The concentration of minority carriers in an extrinsic semiconductor under equilibrium is
   (a) Directly proportional to the doping concentration.
   (b)Inversely proportional to the doping concentration.
   (c) Directly proportional to the intrinsic concentration.
   (d)Inversely proportional to the intrinsic concentration. **[GATE 2006: 1 Mark]**

7. Under low level injection assumption, the injected minority carrier current for an extrinsic semiconductor is essentially the
   (a) Diffusion current (b)Drift current (c) Recombination current
   (d)Induced current **[GATE 2005: 1 Mark]**

Name: Roll No.:

Class: III SEM-A Solution for Tutorial Sheet-1 Subject: ED

1. False

   For a given semiconductor the electron mobility (μn) is always higher than hole mobility (μp). Typical values are For Si ,$\mu n = 1350cm2\ /v - sec.$ $\mu p = 480cm2\ /v - sec.$ $Thus$,$\mu n > \mu p$ Electron conductivity, $\sigma n = nq\mu n$ Hole conductivity, $\sigma p = pq\mu p$ Since, n = p (Dopant concentration is same) q is same for both thus $\sigma n > \sigma p$

2. Given, At T = 300K

   Hole mobility (μp) = $500cm2\ /V\text{–}S$, $kT/q = 26mv$

   Einstein equation relates diffusivity and mobility the two important constants through the relation $D_P = (\ kT/q\ )\ \mu_P$ So, $D_P = \mu_P\ .\ V_T$

   $D_P = 500 \times 26 \times 10^{-3} or$, $D_P = 13cm2\ /S$

3. A P – type sample is illuminated with light,that generates exces carriers. Here majority carriers are holes since sample is of P – type. When light falls on the sample minority carriers will be generated. As the minority carrier concentration increases probability of recombination increase. Option (d)

4. Drift current is given by $I_d = nq\mu_n E$. From above relation we observe that drift current depends on Electric filed and carrier concentration. Option (c)

5. Donor impurities, $N_D = 2.25 \times 1015 atom/cm3$

   when there is complete impurity ionization the number of electrons provided will be the same as Donor impurities. i.e

   $$n = N_D = 2.25 \times 10^{15}/cm^3$$

   $$P_0 = \frac{n_i^2}{n_0} = \frac{(1.5 \times 10^{10})^2}{2.25 \times 15^{15}} = \frac{2.25 \times 10^{20}}{2.25 \times 10^{15}}$$

   $$= 10^5/cm^3$$

   Option(D)

6. For n type semiconductor p (holes) represents the minority carrier concentration.

   As per Mass Action law $n.\ p = n_i^2 = constant$

   So $p \propto 1/n$ So, inversely proportional to doping concentration Option (b)

7. Total current density is given by

   $$J_n = qu\,\mu_n\,E + q\,D_n \frac{dn}{dx}$$

   The first term represents the drift current due to electric field (E) and second term represents diffusion current due to concentration gradient. Because there is low level injection so n is small. First term will give negligible current. Here dn/dx is not small. So the current will be due to diffusion current term. Option (a)

Tute Sheet - 2

III SEM
EC - A
Subject - ED

Que. ① In a uniformly doped abrupt p-n junction the doping level of the n-side is four (4) times the doping level of the p-side.
The ratio of the depletion layer width of n-side versus p-side is: [Gate 1990: 2 marks]

a) 0.25 b) 0.5 c) 1.0 d) 2.0

Que. ② A silicon P-N junction at a temp of 20°C has a reverse saturation current of 10 pico amperes (pA). The reverse saturation current at 40°C for the same bias is approximately. [Gate 2005: 1 Mark]

a) 30pA b) 40pA c) 50 pA d) 60pA

Que. ③ In an abrupt p-n junction, the doping concentrations on the p side and n side are $N_A = 9 \times 10^{16}/cm^3$ and $N_D = 1 \times 10^{16}/cm^3$ respectively. The p-n junction is reverse biased and the total depletion width is 3 μm. find out the depletion width on the p side. [Gate 2004: 2 marks]

Que. ④ A zener diode, when used in voltage stabilization circuits, is biased in: [Gate 2011: 1 Mark]

a) reverse bias region below the breakdown voltage.
b) reverse breakdown region
c) Forward bias region
d) Forward bias constant current mode

Que. ⑤ Silicon diode is carrying a constant current of 1mA, when the temp of diode is 20°C, V_D is found to be 700mV. If the temp rises to 40°C, V_D becomes approximately equal to [Gate 2002: 1 Mark]

a) 740mV b) 650V c) 680mV d) 700mV

Que. ⑥ The depletion capacitance, C_j of an abruptly p-n junction with constant doping on either side varies with Reverse bias V_R as [Gate 1995: 1 Mark]

a) $C_j \propto V_R$ b) $C_j \propto V_R^{-1}$ c) $C_j \propto V_R^{-1/2}$ d) $C_j \propto V_R^{-1/3}$

Que. ⑦ Compared to p-n junction with $N_A = N_D = 10^{14}/cm^3$, which one of the following statements is true for a p-n junction with $N_A = N_D = 10^{20}/cm^3$? [Gate 2010: 2 marks]

a) Reverse breakdown voltage is lower and depletion capacitance is lower.
b) Reverse breakdown voltage is higher and depletion capacitance is lower.
c) Reverse breakdown voltage is lower and depletion capacitance is higher
d) Reverse breakdown voltage is higher and depletion capacitance is higher.

Que (8) The 6V zener diode shown in figure has zero zener resistance and knee current of 5mA. The minimum value of R. so that the voltage across it does not fall below 6V is [Gate 1992 : 2marks]

a) 1.2 KΩ b) 50Ω c) 80Ω d) 0Ω

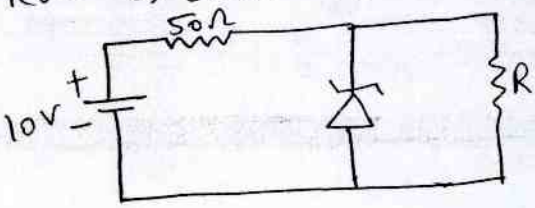

Que (9) In a voltage regulator shown in fig, the load current can vary from 100mA to 500mA Assuming that the zener diode is ideal (i.e. the zener knee current is negligibly small and zener resistance is zero in the breakdown region) the value of R is [Gate 2004 : 2marks]

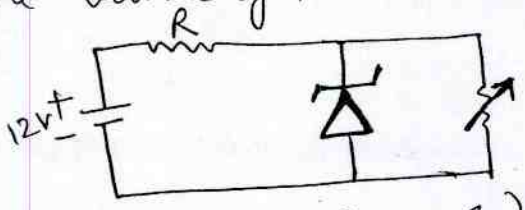

a) 7Ω b) 70Ω c) $\frac{70}{3}$ Ω d) 14Ω

Que (10) The zener diode in the regulator circuit shown in the figure has a zener voltage of 5.8V and zener knee current of 0.5mA. The maximum load current drawn from this circuit ensuring proper functioning over the input voltage range between 20 and 30 volts is [Gate 2005 : 2marks]

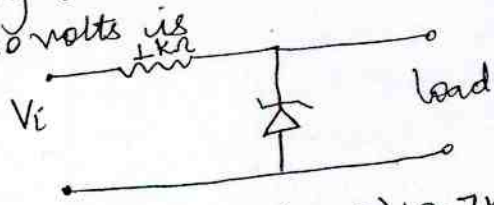

a) 23.7mA b) 14.2mA c) 13.7mA d) 24.2mA

Solution for Tute sheet 2

Sol^n ① $\frac{W_N}{W_P} = \frac{N_A}{N_D} = \frac{N_A}{4N_A} = \frac{1}{4} = 0.25$

Ans a)

Sol^n ② For every 10°c rise in temp reverse saturation current doubles according to the following eq^n

$$I_{02}(T) = I_{01} \times 2^{(T_2-T_1)/10}$$

$$I_{02}(T) = 10\times10^{-12} \times 2^{(20/10)}$$

$$I_{02}(T) = 40\,pA$$

Sol^n ③ $\frac{W_N}{W_P} = \frac{N_A}{N_D}$ {as $W \simeq W_N$ bcz $W_N >> W_P$}

$$W_P = \frac{W_N \times N_D}{N_A} = \frac{3\mu m \times 10^{16}}{9\times10^{16}} = 0.3\mu m$$

Sol^n ④ (b) In Breakdown region only, zener diode is useful. In reverse bias region below the breakdown voltage it will behave like an open circuit.

Sol^n ⑤ (b) For either Si or Ge $\frac{dV}{dT} \simeq -2.5\,mV/°c$ in order to maintain a constant value of I

$$T_2 - T_1 = 40 - 20 = 20°c$$

$$-2.5 \times 20\,mV = 50\,mV$$

Therefore, $V_D = 700 - 50 = 650\,mV$

Sol^n ⑥ (c) $C_J \propto V_R^{-1/2}$

Sol^n ⑦ (c) with increase in doping, the reverse breakdown voltage decreases and depletion width d also decreases. Since depletion capacitance $C = \epsilon A/d$. So, depletion capacitance increases with increase in doping.

Sol^n ⑧ $I = \frac{10-6}{50} = \frac{4}{50} = 80\,mA$

$$I = I_{Zmin} + I_{Lmax} = I_{Zmax} + I_{Lmin}$$

$$80 = 5 + I_{Lmax} \Rightarrow I_{L,max} = 75\,mA$$

$$R_{min} = \frac{V_L}{I_{L,max}} = \frac{6}{75\times10^{-3}} = 80\,\Omega$$

Ans (c)

Solⁿ (9) $\frac{12-V_Z}{R} = I_L + I_Z$

when $I_L = 100mA$, $\frac{12-5}{R} \geq 100mA$

$R \leq \frac{7 \times 1000}{100} \Rightarrow R \leq 70\Omega$

when $I_L = 500mA$, $\frac{12-5}{R} \geq 500mA$

$R \leq \frac{7 \times 1000}{500} \leq 14\Omega$

$R \leq 14\Omega$

(choosing minimum one)

Ans. (D)

Solⁿ (10) $V_Z = 5.8V$

Maximum load current will be when

$V_0 = V_{imax}$

$V_i = 30V$

$\frac{30-5.8}{1K\Omega} = I_L + I_Z$

$24.2mA = I_L + I_Z$

$I_L = 24.2mA - 0.5mA$

$I_L = 23.7\ mA$

eet 3

0 kΩ

above, the output voltage Vo of the circuit will

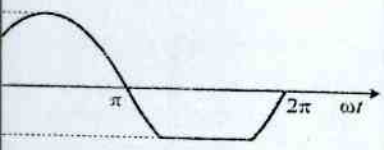

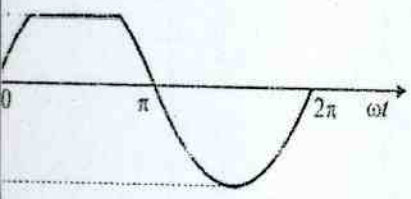

ener diode may be assumed to require a
ns. The value of R (in ohms) required for
___. [Gate 1991]

ition region in a semiconductor p-n junction

ns.
holes.

de carrying a constant current [Gate 1999]
May increase and decrease depending upon the

in terms of [Gate 1999]
cm / sec

ute Sheet 3

e reverse biased and hence, it can be

$2\ V_0$

$= \frac{V_i}{2}$ [By VDR]

ard bias i.e. ON,

11.4 V

ore than 11.4 V which is never possible and
always. Hence, Vo= 5sinωt at all times.

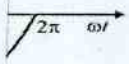

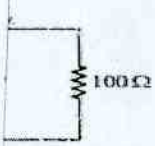

n by,

125 mA

or satisfactory
30 Ω.

Solution forTute Sheet 3

3.(C)

4. The relation between voltage across diode and temperature is given by,

dv/dt=-2.5mv/°c

Hence, the correct option is (B).

5.

Mobility (μ) of an electron in a conductor is given by,

$$\mu = \frac{\text{Drift velocity}}{\text{Electric field}}$$

$$\text{Unit of mobility} = \frac{\text{Unit of drift velocity}}{\text{Unit of electric field}}$$

$$= \frac{\text{cm/sec}}{\text{V/cm}} = \text{cm}^2/\text{V-sec}$$

Hence, the correct option is (A).

6.

Case 1 : $V_{in(max)} = 10$ V

D_1 is forward biased i.e. ON and D_2 is reverse biased i.e. OFF.

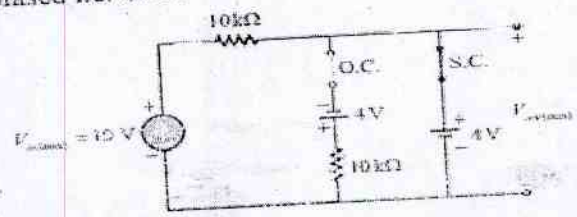

Hence, $V_{out(max)} = 4$ V

Case 2 : $V_{in(min)} = -10$ V

Diode D_1 is reverse biased i.e. OFF.

Diode D_2 is forward biased i.e. ON.

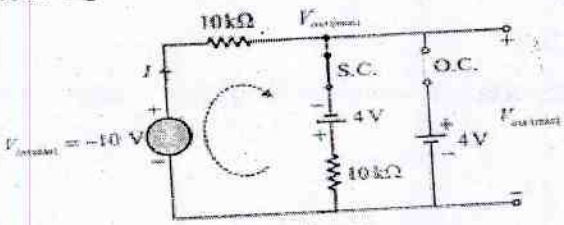

Applying KCL in above figure,

$$\frac{V_{out(min)} - (-10)}{10} + \frac{V_{out(min)} + 4}{10} = 0$$

$$2V_{out(min)} + 14 = 0$$

$$V_{out(min)} = -7 \text{ V}$$

Hence, the correct option is (D).

7.

(i) $R_Z = 0.1\ \text{k}\Omega$

(ii) Zener breakdown voltage,

$V_Z = 3.3\ \text{V}$

Given circuit is shown below,

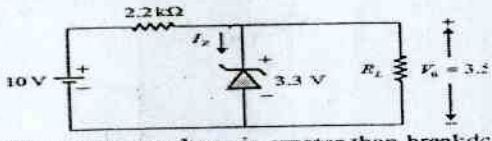

Since, output voltage is greater than breakdo voltage of Zener diode ($V_0 > V_Z$), theref Zener diode is in reverse breakdown region.

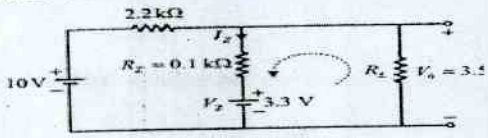

Applying KVL in the loop shown,

$$-3.5 + I_Z \times 0.1 + 3.3 = 0$$

$$I_Z = \frac{3.5 - 3.3}{0.1} = 2\ \text{mA}$$

Hence, the correct option is (C).

8.

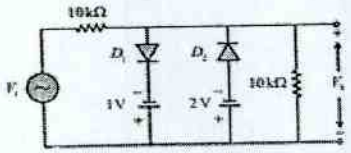

During positive half cycle of input, diode D_1 will be ON due to -1 V and diode D_2 will be OFF due to -2 V.

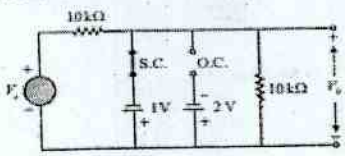

From figure,

$$V_0 = -1\ \text{V}$$

For diode D_1 to be OFF, V_0 should be less than -1 V.

For $-2\text{V} < V_0 < -1\text{V}$,

Both diodes D_1 and D_2 will be OFF for this range.

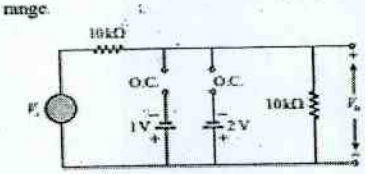

From figure,

$$V_0 = \frac{10}{10+10} V_i = \frac{V_i}{2} \quad \text{[By VDR]}$$

Hence, both diodes are OFF and the output is not clipped when $-2 < V_0 < -1$

i.e. $-2 < \frac{V_i}{2} < -1 \Rightarrow -4 < V_i < -2$.

Therefore, for output to be clipped, input voltage must be outside the range – 2 V to – 4 V.

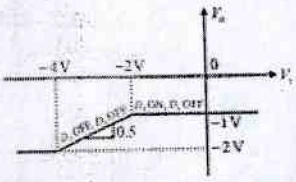

Fig. Transfer characteristics

Hence, the correct option is (B).

9.

(i) Thermal voltage, $V_T = 25$ mV

(ii) Diode current, $i_D = 2$ mA

Dynamic resistance is given by,

$$r_D = \frac{V_T}{i_D} = \frac{25 \text{ mV}}{2 \text{ mA}} = 12.5\ \Omega$$

Hence, the correct option is (B).

10.

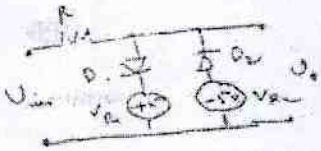

TUTORIAL SHEET-1 **WEEK-1** **III SEM** **SUBJECT:DSD**

Q.1 For the given circuit shown below, the output F is given by

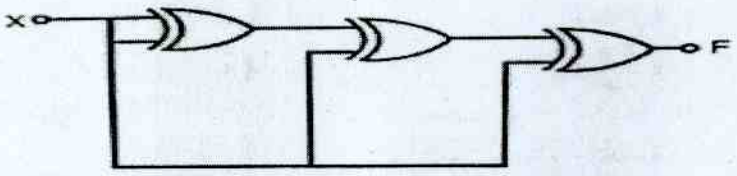

(a) F = 1 (b) F = 0
(c) F = X (d) F = $\overline{X}$

Q.2 Minimum number of 2 input NAND gates are required to implement the function given below is:

$$F = (\overline{X} + \overline{Y})(Z + W)$$

Ans: 4

Q.3 for the Logic circuit shown below, the output Y is equal to

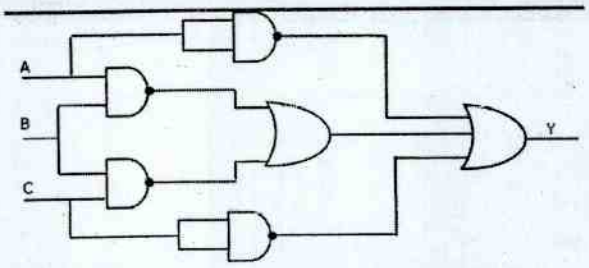

(a) $\overline{ABC}$

(b) $\overline{A} + \overline{B} + \overline{C}$

(c) $\overline{AB} + \overline{BC} + \overline{A} + \overline{C}$

Q.4 For the logic circuit shown in the figure, the required input combination (A,B,C) to make the output X=1 is

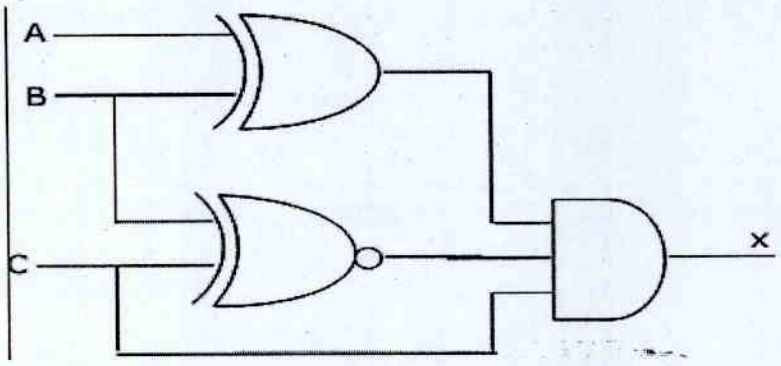

Ans 0, 1, 1

Q.5 if the imput to the digital circuit of the figure, consisting of a cascade of 20 XOR gates is X, then the output Y is

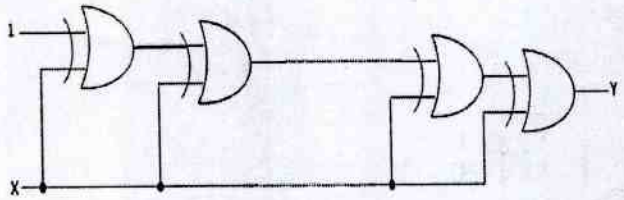

(a) 0 (b) 1

(c) $\overline{X}$ (d) X

Q.6 The truth table for the output Y in terms of three input A,B,C are given. Draw the logic circuit realization using NOR gate only

A	0	1	0	1	0	1	0	1
B	0	0	1	1	0	0	1	1
C	0	0	0	0	1	1	1	1
Y	1	1	1	0	1	0	0	0

Ans : $Y = (\overline{A} + \overline{B})(\overline{B} + \overline{C})(\overline{A} + \overline{C})$

Q. 7 the KMAP for a Boolean expression is shown here. The number of essential prime implicants for this function is

CD \ AB	00	01	11	10
00	1	1	0	1
01	0	0	0	1
11	1	0	0	0
10	1	0	0	1

a. 4 b. 5 c. 6 d. 7

Q.8 A 'code convertor' is to be designed to convert from the BCD (5421) code to normal BCD (8421) code. The input BCD combination of the input is given below. A block diagram of the convertor is shown.

a. Draw KMAP for output W, X, Y and Z

B. obtained minimized expression for the output W, X, Y and Z?

Decimal	BCD(5421)			
	A	B	C	D
0	0	0	0	0
1	0	0	0	1
2	0	0	1	0
3	0	0	1	1
4	0	1	0	0
5	1	0	0	0
6	1	0	0	1
7	1	0	1	0
8	1	0	1	1
9	1	1	0	0

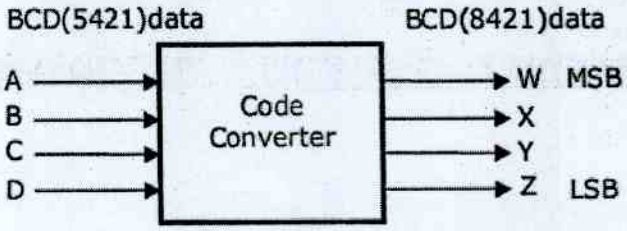

Q.9 A two bit binary multiplier can be implemented using

a. 2 input AND gates only

b. 2 input XOR gates and 2 input AND gates only

c. Two 2 input NOR gates and one XOR gate

d. XOR gates and shift registers

~~Q.9~~

Q.10 For the ring oscillator shown in the figure, the propagation delay of each inverter is 100 pico sec. What is the fundamental frequency of the oscillator output?

~~Q.10~~

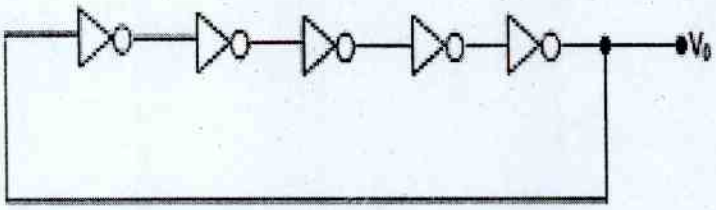

a. 10 MHz b. 100 MHz c. 1 GHz d. 2 Ghz

GATE QUESTIONS 2019-20
Sub: MICROWAVE THEORY&TECHNIQUES
III YEAR B. Tech. Vth Semester
Branch: ECE
NAME :
Roll No:

1. The phase velocity of waves propagation in hollow metal waveguide is [GATE 2001]
   (a)Greater than velocity of light in free space
   (b)Less velocity of light in free space
   (c) Equal to velocity of light in free space
   (d)Equal to group velocity
2. The phase velocity for the TE10 mode in an air filled rectangular waveguide is [GATE 2004]
   (a) Less than c (b)Equal to c (c) Greater than c (d)None of the above Ground wave
3. Which of the following statement is true regarding the fundamental mode of the metallic waveguides .P: Coaxial Q: Cylindrical R: Rectangular[GATE 2009]
   (a) Only P has no cut off frequency
   (b)Only Q has no cut off frequency
   (c) Only R has no cut off frequency
   (d)All three have cut off frequency
4. The modes of rectangular waveguide are denoted by TEmn / TMmn when m and n are Eigen numbers along the larger and smaller dimensions of the waveguide respectively. Which one of the following statement is true. [GATE 2011]
   (a) The TM10 mode of waveguide does not exist. (b)The TE10 mode of waveguide does not exist. (c) The TM10 and TE10 modes both exist and have same cut off frequency. (d)The TM10 and TE10 modes both exist and have same cut off frequency
5. The cut off frequency of waveguide depends upon[GATE 1987]
   (a) The dimensions of the waveguide.
   (b)The dielectric property of the medium in the waveguide. (c) The characteristic impedance of the waveguide

   (d)The transverse and axial components of the Fields.
6. Choose the correct statements for a wave propagating in an air filled rectangular waveguide (a) Guided wavelength is never less than free space wavelength. (b)Wave impedance is never less than free space impedance. (c) Phase velocity is never less than the free space velocity. (d)TEM mode is possible if the dimensions of the waveguide are properly chosen[GATE 1990].
7. A rectangular waveguide has dimensions$1cm \times 0.5\ cm$. Its cut off frequency is (a) 5 GHz (b)10 GHz (c) 15 GHz (d)20 GHz[GATE 2000]
8. A rectangular waveguide having TE10 mode as dominant mode is having a cut off frequency of 18 GHz for the TE30 mode. The inner broad – wall dimension of the rectangular waveguide is (a) 5/3 cm (b)5 cm (c) 5/2 cm (d)10 cm[GATE 2006]
9. A rectangular waveguide of internal dimensions (a = 4 cm and b = 3 cm) is to be operated in TE11 mode. The minimum operating frequency is (a) 6.25 GHz (b)6.0 GHz (c) 5.0 GHz (d)3.75 GHz[GATE 2008].
10. An air – filled rectangular waveguide of internal dimension a $cm \times b\ cm$ $(a > b)$ has a cut off frequency of 6 GHz for the dominant TE10 mode. For the same waveguide, if the cutoff frequency of the TM11 mode is 15 GHz, the frequency of the TE01 mode GHz is . Find it. [GATE 2015].

SOLUTIONS-
Q1-C ,Q2-C,Q3-A,Q4-A,Q5-A ,Q6C,Q7-C,Q8-C,Q9-A,Q10-13.75GHz.

Marks List For Tute 1			
III SEM (II YEAR)		SESSION : 2019-2020	
SECTION-A		MM = 7	
ECE			
SN	EXAM ROLL NO	NAME OF STUDENT	Marks
1	18ESKEC003	ABHISHEK JAIN	AB
2	18ESKEC005	ADITI PRIYA	5
3	18ESKEC007	AKASH CHANDEL	4
4	18ESKEC008	AKSHAT JAIN	4
5	18ESKEC009	AMAN BAHETI	5
6	18ESKEC011	AMIT KUMAR GODARA	4
7	18ESKEC012	AMIT LAWANIYA	4
8	18ESKEC015	ANSHU VERMA	5
9	18ESKEC016	ASHISH MAHESHWARI	AB
10	18ESKEC018	ASHWANI MALAV	4
11	18ESKEC019	AYUSH JANGIR	AB
12	18ESKEC020	AYUSHI GARG	5
13	18ESKEC023	BHAVYA BHATNAGAR	4
14	18ESKEC024	BHAVYA KHATRI	6
15	18ESKEC025	BHUSHAN AMETA	AB
16	18ESKEC026	BRIJ KISHORE SHARMA	4
17	18ESKEC028	DAKSH SHARMA	3
18	18ESKEC029	DEVANSHU JANGID	4
19	18ESKEC032	FAISAL KHAN	6
20	18ESKEC033	GUNJAN GUPTA	5
21	18ESKEC034	HARSH KANOJIA	4
22	18ESKEC035	HIMANI DEVI	4
23	18ESKEC036	ISHITA VAID	5
24	18ESKEC037	JYOTI SHARMA	6
25	18ESKEC038	KHUSHWANT PANWAR	3
26	18ESKEC039	KIRAN SOLANKI	AB
27	18ESKEC043	LAKSHYA GUPTA	4
28	18ESKEC044	MAHARSHI BHATNAGAR	4
29	18ESKEC045	MAHIMA DARIYANI	5
30	18ESKEC046	MAHIMA SHARMA	4
31	18ESKEC047	MANAN SHARMA	AB
32	18ESKEC050	MUDIT KUKRETI	3
33	18ESKEC051	NAKSHATRA BHARDWAJ	4
34	18ESKEC053	NITIN CHITTORIA	4
35	18ESKEC054	PARTH BHANDARI	AB
36	18ESKEC055	PIYUSH GUPTA	AB
37	18ESKEC056	POOJA CHAUDHARY	2
38	18ESKEC061	RAJEEV SHARMA	4
39	18ESKEC062	RAJESH KUMAR	4
40	18ESKEC063	RAKESH SINGH	3
41	18ESKEC065	RITIKA AGARWAL	5
42	18ESKEC066	SABHYATA AGARWAL	6

43	18ESKEC068	SANGEETA SHARMA	6
44	18ESKEC069	SAUMYA GAUTAM	AB
45	18ESKEC070	SHASHANK PANDIYA	4
46	18ESKEC071	SHIVAM KUMAR GAUR	4
47	18ESKEC073	SHUBHAM UDSARIA	5
48	18ESKEC074	SHUBHI SAMARIA	AB
49	18ESKEC075	SIDDHARTH RAWAT	5
50	18ESKEC076	SONU SAINI	3
51	18ESKEC078	SOURAV SONI	4
52	18ESKEC079	UDYAN SRIVASTAVA	5
53	18ESKEC080	UJALA JHANWAR	AB
54	18ESKEC082	VIBHU MATHUR	6
55	18ESKEC084	VIDUSHI PAREEK	4
56	18ESKEC086	VIPUL GUPTA	5
57	18ESKEC087	VIRENDRA SINGH RATHORE	3
58	18ESKEC088	VISHAL SEN	3
59	18ESKEC089	YASH SAXENA	4
60	18ESKEC707	ARNAV RAJORIA	5
61	18ESKEC712	DEEPAK SHARMA	4
62	18ESKEC717	GORAKH GUPTA	5
63	18ESKEC720	HIMANSHU SHEKHAR	5
64	18ESKEC732	NITESH SHARMA	6
65	18ESKEC733	PARIKSHIT RATHORE	6
66	18ESKEC735	PRAVEEN KUMAR	AB
67	18ESKEC740	RUCHI KUMARI	4

Namrata

Namrata Joshi

Faculty Name

GATE Qualified students 2018-19

Sr. No.	Student Name	Branch	Category	GATE Registration Number	Qualify Gate (Yes/No)	Marks Obtained
1	SHREE RAMJI	ECE	OBC	EC19S53019096	Yes	26
2	YOGESH LAKESAR	ECE	GEN	EC19S53017213	Yes	28.33
3	REHA BAGDA	ECE	GEN	EC19S53018111	Yes	37.33

SKIT JAIPUR (Odd semester 2018-19)

ELectronics and Communication Department

skit

III EC -A

	1	2	3	4	5	6	7	8
Mo	ECL-11 ED Lab Group 1 RP ECL-06 SP Lab Group 2 RJ		RP ED T-202	Lunch	L-101 NT PR	L-101 AEM-I SG	L-101 SS RJ	
Tu	L-101 ED RP	L-101 ED RP	L-201 TC AS / PRI	Lunch	ECL-16 SP Lab Group 1 RJ ECL-11 ED Lab Group 2 RP		L-103 NT PR	
We	ECL-07 DSD Lab Group 1 VP ECL-01 CP Lab-I Group 2 RK		L-101 AEM-I SG	Lunch	L-206 SS RJ	L-101 DSD VP	WDA	
Th	L-101 ED RP	RP ED L-101	L-101 NT PR	Lunch	ECL-01 CP Lab-I Group 1 RK ECL-07 DSD Lab Group 2 VP		PR NT L-101	
Fr	L-101 DSD VP	L-101 DSD VP	PR NT L-101 JP TS ECL-09	Lunch	L-101 AEM-I SG	L-101 NT PR	JP TS ECL-07	
Sa	L-101 ED RP	L-102 TC AS	L-102 DSD VP	Lunch	L-101 SS RJ	L-101 DSD VP	L-102 ED RP	

Timetable generated: 9/19/2018

aSc Timetables

Teachers:

AS - Anupriya Singh
JP - J.P. Vijay
PRI - Priyanka Sharma
PR - Pallav Rawal
RJ - Ravi Jangir
RK - Ruchika Khandelwal
RP - Rahul Pandey
SG - Sangeeta Gupta
VP - Vikas Pathak

Subjects:

AEM-I - 3 EC2-01 Advanced Engineering Mathematics-I
CP Lab-I - 3EC3-24 Computer Programming Lab-I
DSD - 3EC4-04 Digital System Design
ED Lab - 3EC4-21 Electronics Devices Lab
ED - 3EC4-07 Electronics Devices
DSD Lab - 3EC4-22 Digital System Design Lab
LIBRARY - LIBRARY
Lunch - LUNCH
NT - 3EC4-06 Network Thoeory
SP Lab - 3EC3-23 Signal Processing Lab
SS - 3 EC4-05 Signals and Systems
TC - 3EC1-02 Technical Communication
TS - 3EC7-30 Training Seminar
WDA - Wednes Day Activity

SKIT JAIPUR (Odd semester 2018-19)

ELectronics and Communication Department

skit

V EC-A

	1	2	3	4	5	6	7	8
Mo	5EC6 ADS L-103 RK	5EC3 TE L-103 LKL	5EC1 S&S L-103 AJ	Lunch	5EC5 ME-II L-102 HN	5EC2 LIC L-102 RP	LIBRARY	
Tu	5EC11 PE&DM (Group 1) ECL-09 SA 5EC9 Comm Lab (Group 2) ECL-15 RJ		5EC5 ME-II L-101 HN	Lunch	5EC1 S&S L-103 AJ	5EC6 ADS L-103 RK	LIBRARY	
We	5EC4 AC L-201 RJ	5EC4 AC L-201 RJ	5EC6 ADS L-201 RK	Lunch	5EC8 ME Lab (Group 1) ECL-10 LKL 5EC7 EED Lab (Group 2) ECL-12 RP		WDA	
Th	5EC4 AC L-201 RJ	5EC4 AC L-201 RJ	5EC1 S&S L-204 AJ	Lunch	5EC7 EED Lab (Group 1) ECL-12 RP 5EC10 SP Lab (Group 2) ECL-17 AJ		RJ 5EC4 AC L-103 AJ 5EC1 S&S L-202	
Fr	5EC3 TE L-102 LKL	5EC2 LIC L-102 RP	5EC2 LIC L-102 RP	Lunch	5EC10 SP Lab (Group 1) ECL-17 AJ 5EC8 ME Lab (Group 2) ECL-10 LKL		AJ 5EC1 S&S L-103 RJ 5EC4 AC L-101	
Sa	5EC3 TE L-202 LKL	5EC9 Comm Lab (Group 1) ECL-15 RJ 5EC11 PE&DM (Group 2) ECL-09 SA		Lunch	5EC1 S&S L-103 AJ	5EC2 LIC RP	5EC5 ME-II L-103 HN	

Timetable generated: 9/19/2018

aSc Timetables

Teachers:

AJ - Abhinandan jain
HN - Harshal Nigam
LKL - Lalit Kumar Lata
RJ - Ravi Jangir
RK - Ruchika Khandelwal
RP - Rahul Pandey
SA - Dr. Swati Arora

Subjects:

5EC1 S&S - Signal & Systems
5EC10 SP Lab - Signal Processing Lab
5EC11 PE&DM - Professional Ethics & Digaster Management
5EC2 LIC - Linear Integrated Circuit
5EC3 TE - Telecommunication Engineering
5EC4 AC - Analog Communication
5EC5 ME-II - Microwave Engineering -II
5EC6 ADS - Advanced Data Structure
5EC7 EED Lab - Electronics Engineering Design Lab
5EC8 ME Lab - Microwave Engineering Lab
5EC9 Comm Lab - Communication Engineering Lab-I
LIBRARY - LIBRARY
Lunch - LUNCH
WDA - Wednes Day Activity

SKIT JAIPUR (EVEN Semester 2018-19)

ELectronics and Communication Department

IV EC-A (I-Shift)

skit

	1 08:00 - 09:00	2 09:00 - 10:00	3 10:00 - 11:00	4 11:00 - 11:30	5 11:30 - 12:30	6 12:30 - 01:30	7 01:30 - 02:30	8 02:30 - 03:30
Monday	**MEFA** 202 SM	**MC** 202 GJ	**AC** 202 RP		AC Lab ECL-11 Group 1 RP ADC Lab ECL-15 Group 2 LKL			
Tuesday	**AEM-II** 101 SG-M	**MEFA** 202 SM	**EMI** 202 LKL		ADC Lab Group 1 RS AC Lab ECL-11 Group 2 RP			
Wednesday	**ADC** 103 AA	**EMI** 103 LKL	**MC** 103 GJ		Project Lab ECL-03 Group 1 GJ Project Lab ECL-04 Group 2 KR		**AEM-II** 201 Group 2 SG-M	**WDA**
Thursday	**MC** 101 GJ	**AC** 101 RP	**AEM-II** 101 SG-M		**ADC** 101 AA	**ADC** 101 AA	**EMI** 101 LKL	
Friday	**MC** 101 GJ	**AC** 101 RP	**AC** 101 RP		**ADC** 202 AA	MC Lab ECL-07 Group 1 GJ M&I Lab ECL-09 Group 2 LKL		
Saturday	**ADC** 203 AA	**AC** 203 RP	**AEM-II** 203 SG-M		M&I Lab ECL-09 Group 1 LKL MC Lab ECL-07 Group 2 GJ		**AEM-II** 203 Group 1 SG-M	

Timetable generated: 12/15/2018 aSc Timetables

Subjects:

AA - ANKIT AGRAWAL
GJ - GLORIA JOSEPH
KR - KIRAN RATHI
LKL - LALIT KUMAR LATA
RP - RAHUL PANDEY
RS - RICHA SHARMA
SG-M - Dr. Sangeeta Gupta
SM - Sanjeev Mathur

AC Lab - Analog Circuits Lab
AC - Analog Circuits
ADC Lab - Analog and Digital Communication Lab
ADC - Analog and Digital Communication
AEM-II - Advanced Engineering Maths-II
EMI - Electronics Measurement & Instumentation
Library - Library

M&I Lab - Measurement & Instrumentation Lab
MC Lab - Microcontroller Lab
MC - Microcontroller
MEFA - Managerial Economics and Financial Accountin
Project Lab - Project Lab
WDA - Wednes Day Activity

SKIT JAIPUR (EVEN Semester 2018-19)

ELectronics and Communication Department

VI EC-A (I-Shift)

skit

	1 08:00 - 09:00	2 09:00 - 10:00	3 10:00 - 11:00	4 11:00 - 11:30	5 11:30 - 12:30	6 12:30 - 01:30	7 01:30 - 02:30	8 02:30 - 03:30
Monday	**CS** 103 PAL	CRT 103 NAM / HN			**OFC** 202 MM	**IE** 202 HN	**PD&GA** 202 RI / GP-Eng.	
Tuesday	**CS** 103 PAL	IE Lab Group 1 ECL-12 PRS MP Lab Group 2 ECL-07 RP			**DC** 102 RJ	**DC** 102 RJ	**MW-II** 102 LKL	
Wednesday	**IE** 102 HN	CRT 102 RI / PC			**OFC** 202 MM	**MP** 202 RP	WDA	
Thursday	**IE** 203 HN	**MW-II** 203 LKL	**OFC** 202 MM		MP Lab Group 1 ECL-07 RP IE Lab Group 2 ECL-12 PRS		**CS** 201 PAL	
Friday	**PD&GA** 202 RI / GP-Eng.	CRT 103 US / PRS			RFS Lab Group 1 ECL 01 SJ Comm Lab-II Group 2 ECL-15 JPV		**MP** 201 RP	
Saturday	Comm Lab-II Group 1 ECL-15 HN RFS Lab Group 2 ECL 01 SJ		**CS** 102 PAL		**DC** 103 RJ	**MP** 103 RP	**MW-II** 103 LKL	

Timetable generated: 12/15/2018 aSc Timetables

Subjects:

CRT - CRT
CS - Control System
Comm Lab-II - Communication LAb-II
DC - Digital Communications
IE Lab - Industrial Electronics Lab
IE - Industrial Electronics
Library - Library
MP Lab - Micro Processor Lab
MP - Micro Processor
MW-II - Micro Wave Engg.-II
OFC - Optical Fiber Communication
PD&GA - Personality Development & General Aptitude
RFS Lab - RF Simulation Lab
WDA - Wednes Day Activity

GP-Eng. - Geetika Patni
HN - HARSHAL NIGAM
JPV - J. P. VIJAY
LKL - LALIT KUMAR LATA
MM - Dr. MONIKA MATHUR
NAM - NAMRATA JOSHI
PAL - PALLAV RAWAL
PC - POOJA CHOUDHARY
PRS - PRIYANKA SHARMA
RI - RAJNI IDIWAL
RJ - RAVI JANGIR
RP - RAHUL PANDEY
SJ - SHUBHI JAIN
US - URVASHI SHUKLA

SKIT JAIPUR

ECE Deptt

2018-19

UNIT TEST 1 III

SEM A SEC **EDC**

SR NO	ROLL NO	NAME	MM 20
1	17ESKEC001	Aadarsh Singh Mertia	5
2	17ESKEC002	Aditya Choudhary	**20**
3	17ESKEC004	Akshat Gupta	13
4	17ESKEC005	Akshit Saxena	**15**
5	17ESKEC007	Ananya Tiwari	**18**
6	17ESKEC008	Aniket Rathi	**17**
7	17ESKEC009	Anjali Jain	**16**
8	17ESKEC010	Anjali Parik	**18**
9	17ESKEC011	Anju Choudhary	14
10	17ESKEC012	Ansh Garg	11
11	17ESKEC013	Aparna Maleti	12
12	17ESKEC014	Arpit Agarwal	**15**
13	17ESKEC015	Ashvin Khandelwal	11
14	17ESKEC016	Avi Vanawat	**18**
15	17ESKEC017	Ayush Parasrampuria	AB
16	17ESKEC018	Bharat Singh	**15**
17	17ESKEC019	Bhunesh Kumar	9
18	17ESKEC020	Brijbhushan	13
19	17ESKEC021	Charu Shukla	11
20	17ESKEC024	Chinmay Sharma	11
21	17ESKEC029	Gargi Sharma	10
22	17ESKEC030	Harsh Khandelwal	13
23	17ESKEC031	Himanshu Bairwa	11
24	17ESKEC037	Kinjalk Sharma	AB
25	17ESKEC038	Koustoobh Pareek	AB
26	17ESKEC040	Manju Choudhary	**15**
27	17ESKEC041	Manvendra Shekhawat	8
28	17ESKEC046	Monalisa	**18**
29	17ESKEC047	Naman Mishra	14
30	17ESKEC048	Nikita Modi	10
31	17ESKEC049	Padmakshi Jain	**15**
32	17ESKEC053	Priyanka Jain	**18**
33	17ESKEC054	Puneet Mathur	8
34	17ESKEC055	Quasim Qureshi	11
35	17ESKEC059	Rajkumar Verma	11
36	17ESKEC068	Shivani Priyadarshani	14
37	17ESKEC076	Tarun Awasthi	AB
38	17ESKEC725	Vaibhav Singh Chouhan	AB

Report of GATE classes

Dated: 12/9/18

GATE classes are running according to planned schedule.In III semester a Class test is taken in Electronic Devices and In Vth semester Unit test is taken in signal system. Test paper of these subjects are shown in Annexure.

Practice papers discussed in class in III and Vth Semester is also shown in annexure.

Mukesh.

Rahul Pandey
Assistant Professor

Report of GATE classes

Dated: 09/08/18

GATE classes are running for III and V semester. The subjects which are in GATE syllabus are allotted an extra one hour per week so that more emphasis can be given on important concepts and numerical solving. Following are the subject which are allotted an extra hour per week.

III Semester: Electronic Devices, Digital System Design, Network Theory.

V Semester: Linear Integrated Circuit, Signal &System, Analog Communication.

Rahul

Rahul Pandey
Assistant Professor

Mukesh.

Report of GATE classes

Dated: 20/08/18

GATE classes are running for IIIrd sem as per schedule. Unit tests are taken in this week in subject LIC and ED , Test paper and result analysis is shown in the annexure. It is observed that 50% students have scored more than 75% of the marks in both subjects.
Practice papers discussed in the classes are also shown in annexure.

Mukesh.

Rahul Pandey
Assistant Professor

B.Tech V sem ECE
Signal and system (unit 1 & 2)
GATE Questions

Q→1 Let $\delta(t)$ denote the delta function. the value of the integral $\int_{-\infty}^{\infty} \delta(t) \cos\left(\frac{3t}{2}\right) dt$ is (GATE 2001)

a) 1 b) -1 c) 0 d) $\pi/2$

Q→2 If a signal $f(t)$ has energy E, the energy of the signal $f(2t)$ is equal to (GATE 2011)

a) E b) $\frac{E}{2}$ c) 2E d) 4E

Q→3 For a periodic signal
$v(t) = 30\sin 100t + 10\cos 300t + 6\sin\left(500t + \frac{\pi}{4}\right)$
the fundamental frequency is rad/s is (GATE 2013)

a) 100 b) 300 c) 500 d) 1500

Q→4 the function $x(t)$ is shown in fig. even & odd parts of a unit step function $u(t)$ are respectively (GATE 2005)

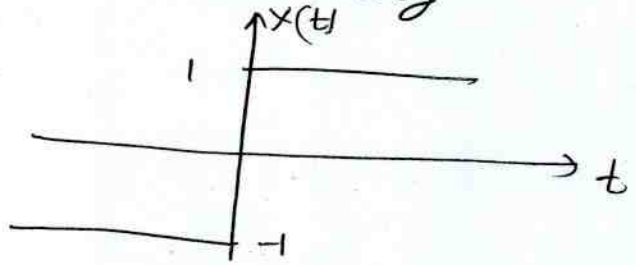

a) $\frac{1}{2}, \frac{1}{2}x(t)$ b) $-\frac{1}{2}, \frac{1}{2}x(t)$ c) $\frac{1}{2}, -\frac{1}{2}x(t)$

d) $-\frac{1}{2}, -\frac{1}{2}x(t)$

Signal and system (Unit-1 & Unit-2)
B.Tech ECE V sem
GATE Questions

Q-5 the result of the convolution $x(-t) * \delta(t-t_0)$ is (GATE 2015)

a) $x(t+t_0)$ b) $x(t-t_0)$ c) $x(-t+t_0)$ d) $x(-t-t_0)$

Q-6

Q-6 The impulse response of a continous time system is given by $h(t) = \delta(t-1) + \delta(t-3)$, the value of the step response at $t=2$ is

a) 0 b) 1 c) 2 d) 3 (GATE 2013)

Q-7 A system is defined by its impulse response $h(n) = 2^n u(n-2)$. the system is

a) stable & causal b) causal but not stable (GATE 2011)

c) stable & not causal d) unstable & not causal

Q-8 The input $x(t)$ and output $y(t)$ of a continuous time system are related as:

$$y(t) = \int_{t-T}^{t} x(u)\,du$$ the system is (GATE 2017)

a) Linear & time variant

b) Linear & time invariant

c) non linear & time variant

d) non-linear & time invariant

Q9 The fourier series expansion of a real periodic signal with fundamental freq. F_0 is given by $g_p(t) = \sum_{n=-\infty}^{\infty} c_n e^{j2\pi n f_0 t}$ It is given that $C_3 = 3+j5$ then C_{-3} is (GATE 2003)

a) $5+j3$ b) $-3-j5$ c) $-5+j3$ d) $3-j5$

Q10 A periodic signal $x(t)$ of period T_0 is given by $x(t) = \begin{cases} 1, & |t| < T_1 \\ 0, & T_1 < |t| < \frac{T_0}{2} \end{cases}$ the d.c. component of $x(t)$ is (GATE 1998)

a) $\frac{T_1}{T_0}$ b) $\frac{T_1}{2T_0}$ c) $\frac{2T_1}{T_0}$ d) $\frac{T_0}{T_1}$

Q11 The trigonometric fourier series of an even function of time does not have the (GATE 2011)

a) DC term b) cosine term c) sine term d) odd harmonic term

Q12 Which of the following cannot be fourier series expansion of a periodic signal? (GATE 2002)

a) $x(t) = 2\cos t + 3\cos 3t$

b) $x(t) = 2\cos \pi t + 7\cos t$

c) $x(t) = \cos t + 0.5$

d) $x(t) = 2\cos 1.5\pi t + \sin 3.5\pi t$

Q13 The input and o/p of a continuous time system are respectively denoted by $x(t)$ and $y(t)$. Which of the following descriptions corresponds to a causal system?

a) $y(t) = x(t-2) + x(t+4)$ (GATE 2008)

b) $y(t) = x(t-4) * (t+1)$

c) $y(t) = (t+4) \times (t-1)$

d) $y(t) = (t+5) \times (t+5)$

Q-1 The following are the impulse response of continuous time LTI systems. Determine whether each system is causal and or stable.

a) $h(t) = e^{-4t} u(t-2)$

b) $h(t) = e^{-6t} u(3-t)$

c) $h(t) = e^{-6|t|}$

d) $h(t) = t e^{-t} u(t)$

Q-2 Determine the fundamental period of the following signals.

a) $x(t) = 2\cos(10t+1) - \sin(4t-1)$

b) $x(n) = 1 + e^{j\frac{4\pi n}{7}} - e^{j\frac{2\pi n}{5}}$

Q-3 Determine whether the following signals are periodic and for those which are, find the fundamental period.

a) $x(n) = (-1)^n$

b) $x(n) = (-1)^{n^2}$

Sol Q-1

a) $h(t) = e^{-4t} u(t-2)$

$\underline{h(t)=0}$ for $t<0$ $\rightarrow$ causal

$$\int_{-\infty}^{\infty} e^{-4t} u(t-2)\, dt = \int_{2}^{\infty} e^{-4t} dt$$

$$= \frac{e^{-8}}{4} < \infty \rightarrow \text{stable}$$

b) $h(t) = e^{-6t} u(3-t)$

$h(t) \neq 0$ for $t<0$ $\rightarrow$ Non-causal

$$\int_{-\infty}^{\infty} e^{-6t} u(3-t) dt = \int \infty \rightarrow \text{unstable}$$

c) $h(t) = e^{-6|t|} = e^{+6t} u(-t) + e^{-6t} u(t)$

$\hookrightarrow$ non-causal

$$h(t) = \int_{-\infty}^{0} e^{6t} dt + \int_{0}^{\infty} e^{-6t} dt$$

$\frac{1}{3} < \infty \rightarrow$ ~~causal~~ stable

d) $h(t) = te^{-t} u(t)$

$\hookrightarrow$ causal

$$= \int_{0}^{\infty} te^{-t} dt \qquad \underline{1<\infty} \rightarrow \text{stable}$$

(24) $\omega_1 = 10, \quad \omega_2 = 4$

$T_1 = \frac{2\pi}{10}, \quad T_2 = \frac{2\pi}{4}$

$\frac{T_1}{T_2} = \frac{2}{5}$ rational no

$T = \frac{2\pi}{2} = \pi$

(b) $\omega_1 = \frac{4\pi}{7}, \quad \omega_2 = \frac{2\pi}{5}$

$T_1 = \frac{2\pi}{4\pi} \times 7, \quad T_2 = \frac{2\pi}{2\pi} \times 5$

$T_1 = \frac{7}{2} \qquad T_2 = 5$

$T = 35$

Q→3 (A) $x(n) = (-1)^n$

$x(n)$ to be periodic $x(n+N) = x(n)$

$x(n+N) = (-1)^{n+N}$

$= (-1)^n (-1)^N$

$x(n+N) = x(n) \frac{(-1)^N}{1}$

$(-1)^N = 1$

$N = 2m$

minimum value of $m = 1$ $(N=2)$

(3 B)

$$x(n) = (-1)^{n^2}$$

$$x(n+N) = (-1)^{(n+N)^2}$$

$$= (-1)^{n^2+N^2+2nN}$$

$$= (-1)^{n^2} (-1)^{N^2+2nN}$$

$$= x(n) \frac{(-1)^{N^2+2nN}}{1}$$

$$(-1)^{N^2+2nN} = 1 = (-1)^{2m}$$

$$N^2+2nN = 2m$$

$x(n)$ is periodic if N^2+2nN is an even integer $N=1$ then

$$(-1)^{1+2n} = 2m$$

$$-1 \neq 1$$

$\underline{N=2}$ is $\underline{\text{possible}}$

Ques 1. Given a continuous time LTI system with unit impulse response $h(t)$. A continuous time ~~inte~~ signal $x(t)$ is applied to the input of this LTI system where

$$x(t) = e^{-at}\, u(t) \quad \text{for } a > 0$$
$$h(t) = u(t) \qquad \text{evaluate } y(t)?$$

Ans. We know that output $y(t)$ of a continuous time LTI system is given by convolution of the applied input & unit impulse response is

$$y(t) = x(t) * h(t) = \int_{-\infty}^{\infty} x(\tau)\, h(t-\tau)\, d\tau \quad (1)$$

Now; graphical representation of $x(\tau)$, $h(\tau)$ & $h(t-\tau)$ for a negative value of $t\,(t<0)$ & for a positive value of $t\,(t>0)$.

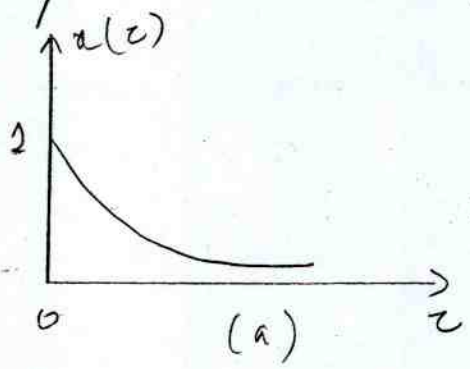

$x(\tau)$.

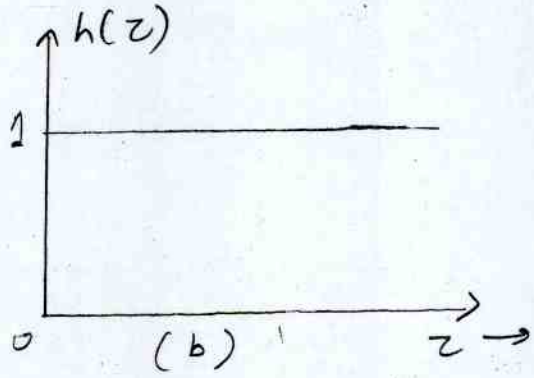

$h(\tau)$

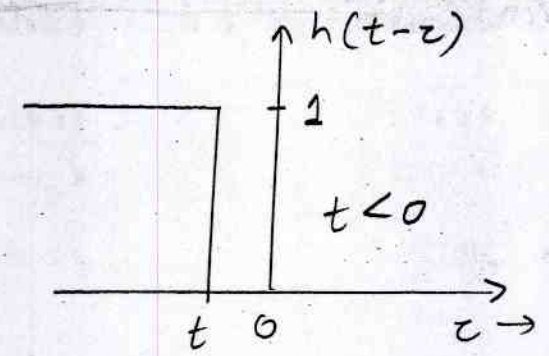

(c)

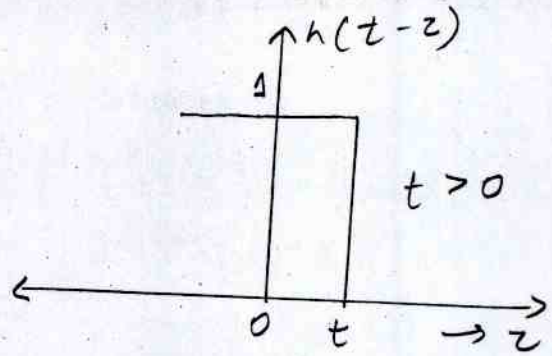

(d)

It is observed that for $t<0$; the product of $x(t)$ & $h(t-\tau)$ is zero & so according to eqⁿ (i) output $y(t)$ is zero.

$$y(t) = 0 \quad \text{for } t<0.$$

for $t>0$, the product of $x(t)$ & $h(t-\tau)$ is

$$x(t)h(t-\tau) = \begin{cases} e^{-a\tau} & ; \text{for } 0<\tau<1 \\ 0 & ; \text{elsewhere} \end{cases}$$

for output $y(t)$ for $t>0$

$$y(t) = \int_0^t x(\tau)h(t-\tau)\,d\tau$$

$$= \int_0^t e^{-a\tau}\,d\tau = \frac{-1}{a}\left[e^{-a\tau}\right]_0^t$$

$$\boxed{y(t) = \frac{1}{a}\left[1-e^{-at}\right]}$$

Hence for all values of t;

$$y(t) = \frac{1}{a}\left[1-e^{-at}\right]u(t)$$

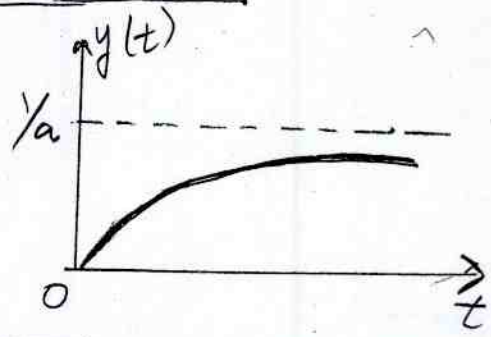

Ques. A continuous time signal $x(t)$ is applied to the input of a continuous time LTI system with unit impulse response $h(t)$. Find the output $y(t)$ given that

$$x(t) = e^{2t} u(-t)$$
$$\& \; h(t) = u(t-3)$$

Solⁿ → output $y(t)$ of a continuous LTI system is given by convulation of applied input & unit step impulse response as

$$y(t) = x(t) * h(t) = \int_{-\infty}^{\infty} x(\tau) h(t-\tau) d\tau$$

Graphical representation of signal $x(\tau)$ & $h(t-\tau)$

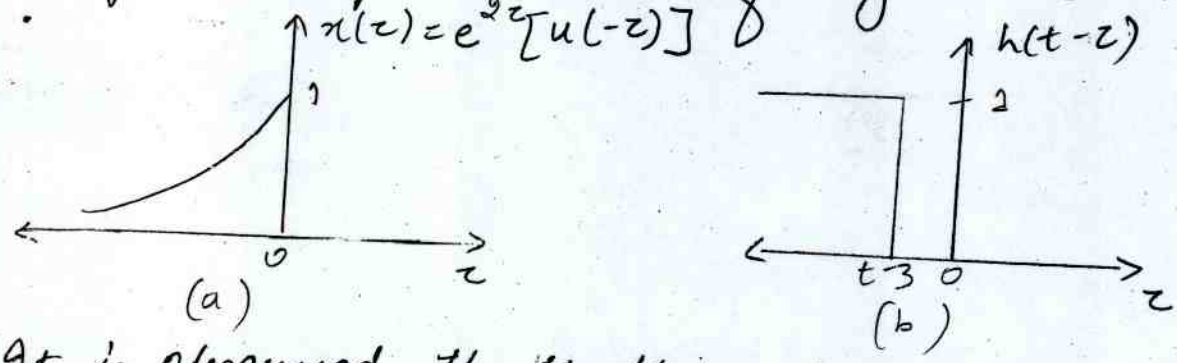

It is observed that these 2 signals $x(\tau)$ & $h(t-\tau)$ have region of non zero overlap irrespective of value of t.

where $t-3 \le 0$ product $x(t)h(t-\tau)$ is non-zero for $-\infty < \tau < t-3$

$$y(t) = \int_{-\infty}^{\infty} x(\tau) h(t-\tau) d\tau = \int_{-\infty}^{t-3} e^{2\tau} d\tau$$

$$y(t) = \frac{1}{2} e^{2(t-3)}$$

Again for $t-3 \geq 0$; the product $x(t)\,h(t-\tau)$ is non-zero for $-\infty < t < 0$

$$y(t) = \int_{-\infty}^{0} x(\tau)\,h(t-\tau)\,d\tau$$

$$= \int_{-\infty}^{0} e^{2\tau}\,d\tau = \frac{1}{2}$$

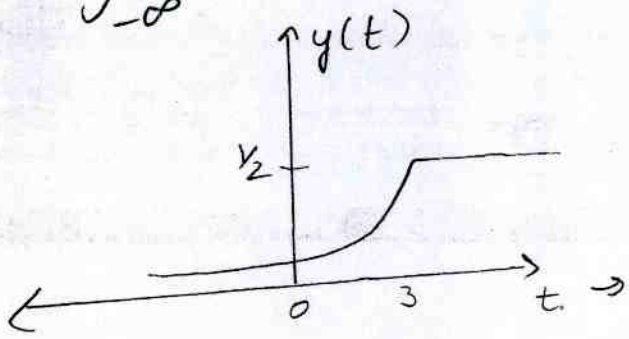

Output $y(t)$

Ques. Let $x(t) = u(t-3) - u(t-5)$

& $h(t) = e^{-3t}\,u(t)$

(i) Compute $y(t)$?

(ii) Compute $g(t) = \dfrac{dx(t)}{dt} * h(t)$?

(iii) How is $g(t)$ related to $y(t)$?

Ans. We see that $h(t)$ is non-zero only for $0 \leq t \leq \infty$; therefore

$$y(t) = \int_{-\infty}^{\infty} h(t) \cdot x(t-\tau)\,d\tau$$

$$= \int_{0}^{\infty} e^{-3\tau} \{u(t-\tau-3) - u(t-\tau-5)\}\,dt \quad \text{— (i)}$$

We know that $u(t-\tau-3)-u(t-\tau-5)$ is non-zero in the range $(t-5)<t<(t-3)$. Therefore for $t \le 3$ the above integral is zero.

$$y(t)=\int_0^{t-3} e^{-3\tau}\,d\tau$$

$$= \frac{1-e^{-3(t-3)}}{3}$$

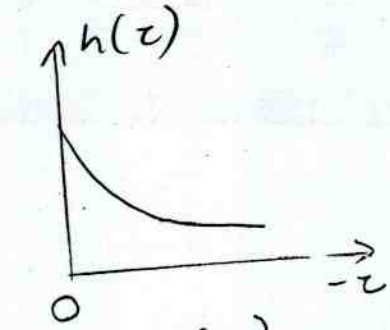

(a)

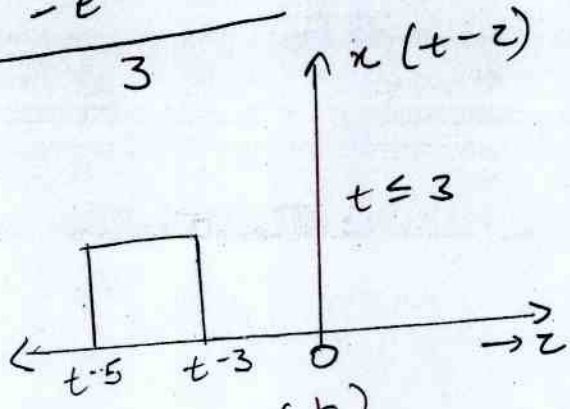

(b)

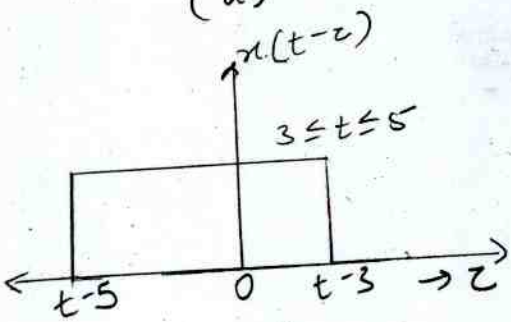

(c)

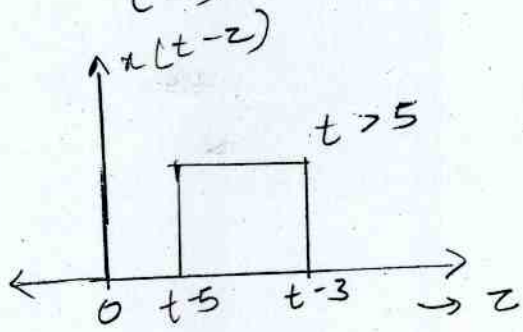

(d)

for $t>5$; the integral is

$$y(t)=\int_{t-5}^{t-3} e^{-3\tau}\,d\tau$$

$$= \frac{(1-e^{-2})\,e^{-3(t-5)}}{3}$$

Therefore, result of convulation

$$y(t) = \begin{cases} 0 & -\infty < t \leq 3 \\ \dfrac{1-e^{-3(t-3)}}{3} & 3 < t \leq 5 \\ \dfrac{(1-e^{-6})\,e^{-3(t-5)}}{3} & 5 < t \leq \infty \end{cases}$$

(ii) By differentiating w.r.t time

$$\frac{dx(t)}{dt} = \delta(t-3) - \delta(t-5)$$

Therefore

$$g(t) = \frac{dx(t)}{dt} * h(t)$$

We know

$$x(t) * \delta(t) = x(t)$$

$$x(t) * \delta(t-t_0) = x(t-t_0)$$

Therefore

$$g(t) = e^{-3(t-3)}u(t-3) - e^{-(t-5)}u(t-5)$$

OR.

$$g(t) = \begin{cases} 0 & -\infty \leq t \leq 3 \\ e^{-3(t-3)} & 3 < t \leq 5 \\ (e^{-6}-1)e^{-3(t-5)} & 5 < t \leq \infty \end{cases}$$

$$\frac{dy(t)}{dt} = \begin{cases} 0 & -\infty \leq t \leq 3 \\ e^{-3(t-3)} & 3 < t \leq 5 \\ (e^{-6}-1)e^{-3(t-5)} & 5 < t < \infty \end{cases}$$

$$\left[g(t) = \frac{dy(t)}{dt} \right]$$

Ques. Obtain the convolution sum of the 2 discrete time signals $x[n] = e^{-n^2}$

$h[n] = 3n^2$; for all n

Solution: → For a discrete time LTI system, convolution sum is

$$y[n] = x[n] * h[n] = \sum_{k=-\infty}^{\infty} x[k]\, h[n-k]$$

$$x[k] = e^{-k^2}$$

$$h[n-k] = 3[n-k]^2$$

$$y[n] = \sum_{k=-\infty}^{\infty} e^{-k^2} 3[n-k]^2 = 3\sum_{k=-\infty}^{\infty} e^{-k^2}[n^2+k^2-2nk]$$

$$y[n] = 3n^2 \sum_{k=-\infty}^{\infty} e^{-k^2} + 3\sum_{k=-\infty}^{\infty} k^2 e^{-k^2} - 6n\sum_{k=-\infty}^{\infty} k e^{-k^2}$$

Ques. Obtain the convolution sum of two discrete time LTI system. $x[n] =$

$h[n] =$; for all n

Ans. For discrete time LTI system, the convolution sum is. $y[n] = x[n] * h[n] = \sum_{k=-\infty}^{\infty} x[k]\, h[n-k]$

Graphically shown in fig.

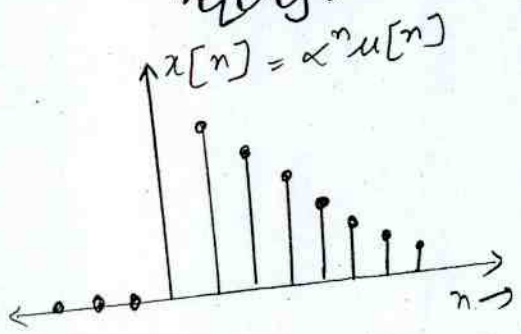

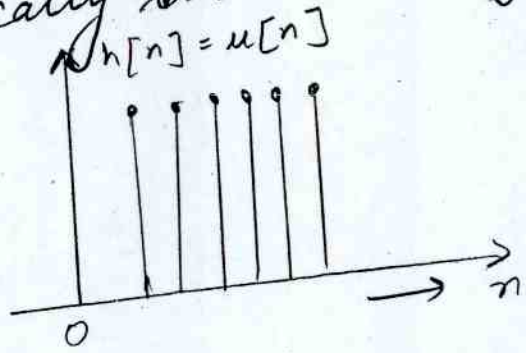

Plotting $h[-k]$, $h[-1-k]$, $h[1-k]$ & finally $h[n-k]$ for an arbitary positive & negative values of n.

For $n<0$; there is no overlap b/w the non-zero points in $x[k]$ & $h[n-k]$.

For $n<0$ $\quad x[k]\,h[n-k]=0$ for all values of k.

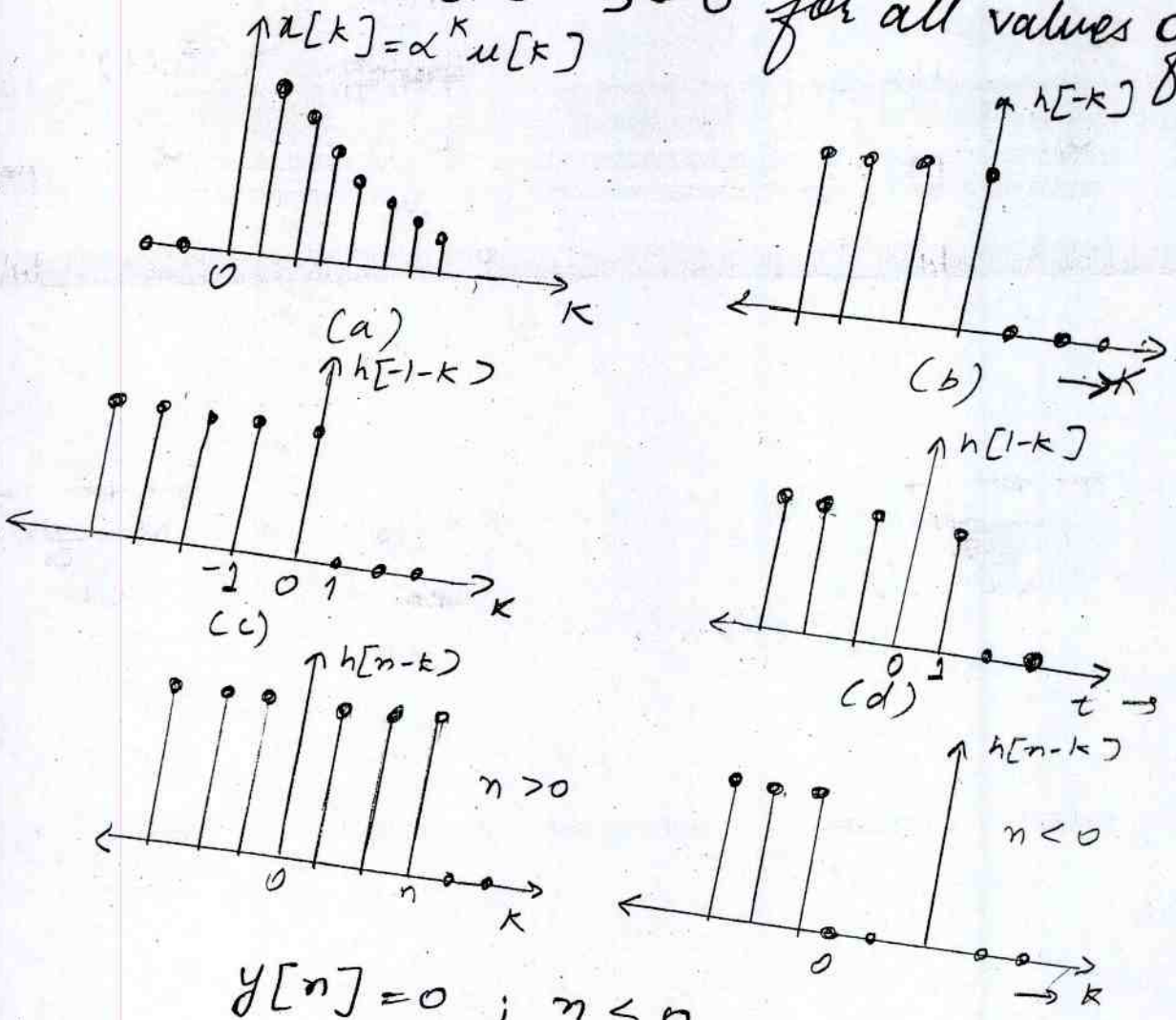

$$y[n]=0 \;;\; n<0$$

for $n\geq 0$

$$y[n]=x[k]\,h[n-k]=\begin{cases}\alpha^k & 0\leq k\leq n\\ 0 & \text{otherwise}\end{cases}$$

for $n\geq 0$

$$y[n]=\sum_{k=0}^{n}\alpha^k=\sum_{k=0}^{n}\alpha^k=\frac{1-\alpha^{n+1}}{1-\alpha}\quad \text{for } n\geq 0$$

$$y[n]=\left[\frac{1-\alpha^{n+1}}{1-\alpha}\right]u[n]$$

Tutorial sheet

Chapter-1

(T2)

Q1> Show that the product of two even signals or of two odd signals is an even signal and that the product of an even and an odd signal is an odd signal?

Solⁿ:-

Let $x(t) = x_1(t)\, x_2(t)$. If $x_1(t)$ and $x_2(t)$ are both even, then

$$x(-t) = x_1(-t)\, x_2(-t) = x_1(t)\, x_2(t) = x(t)$$

and

$x(t)$ is even. If $x_1(t)$ & $x_2(t)$ are both odd, then

$$x(-t) = x_1(-t)\, x_2(-t) = -x_1(t)\,[-x_2(t)]$$
$$= x_1(t)\, x_2(t) = \underbrace{x(t)}_{\text{is even}}$$

and $x(t)$ is even. If $x_1(t)$ & $x_2(t)$ is odd, then

$$x(-t) = x_1(-t)\, x_2(-t) = x_1(t)\,[-x_2(t)]$$
$$= -x_1(t)\, x_2(t) = -x(t)$$

and $x(t)$ is odd.

→ Variable t represents either a continuous or discrete variable.

Q2> Give an example of a system that satisfies the condition of additivity but not of homogeneity?

Solⁿ:-

Consider a discrete-time system represented by an operator T such that

$$y[n] = T\{x[n]\} = x^*[n] \quad -(1)$$

where $x^*[n]$ is the complex conjugate of $x[n]$. Then,

$T\{x_1[n] + x_2[n]\} = \{x_1[n] + x_2[n]\}^* =$
$x_1^*[n] + x_2^*[n] = y_1[n] + y_2[n]$

Next,

If α is any arbitary complex-valued constant, then

$T\{\alpha x[n]\} = \{\alpha x[n]\}^* = \alpha^* x^*[n]$
$= \alpha^* y[n] \neq \alpha y[n]$

Thus,

The system is additive but not homogeneous.

Q3> Consider a discrete-time LTI system whose input $x[n]$ and output $y[n]$ are related by

$$y[n] = \sum_{k=-\infty}^{\infty} 2^{k-n} x[k+1]$$

Is the system casual?

Sol^n:-

The impulse response $h[n]$ of the system is given as

$$h[n] = \sum_{k=-\infty}^{n} 2^{k-n} \delta[k+1]$$

$$= \sum_{k=-\infty}^{n} 2^{-(n+1)} \delta[k+1]$$

$$\Rightarrow \quad 2^{-(n+1)} \sum_{K=-\infty}^{n} \delta[K+1]$$

By changing the variable $K+1 = m$ and by $u[n] = \sum_{K=-\infty}^{n} \delta[K]$. We obtain,

$$h[n] = 2^{-(n+1)} \sum_{m=-\infty}^{n+1} \delta[m]$$

$$= 2^{-(n+1)} u[n+1] \qquad -①$$

From Eq^n-①, we have $h[-1] = u[0] = 1 \neq 0$.

Thus, the system is not casual.

1) Test the periodicity of the signal :

$$y(t) = \cos\left(t + \frac{\pi}{3}\right)$$

b) Show that : $\delta[m] = u[m] - u[m-1]$

where $\delta[m]$ is unit impulse and $u[m]$ is unit step function.

c) Find, whether the given signal is periodic or not :

$$x[m] = \sin\left(\frac{m}{5}\right)$$

a) For periodicity of a function, $f(x).F(x) = f(x \text{ to } K)$, where K is fundamental period of $f(x)$ and $m \in I$

As, $\cos\left(t + \frac{\pi}{3}\right) = \cos\left(t + \frac{\pi}{3} + 2\pi\right)$

Therefore, $\cos\left(t + \frac{\pi}{3}\right)$ is periodic with fundamental period 2π.

b) $\delta(m) = u(m) - u(m-1)$

So, $u[m] = \{----, 0, 0, 1, 1, 1, ---\}$

$u[m-1]$ is shifted $u[m]$ by 1 unit

ie. $u[m-1] = \{----, 0, 0, 0, 1, 1, 1, ---\}$

this $u[m] - u[m-1] = \{---- 0, 0, 0, 1, 0, 0 ---\}$

$= \delta[m]$

c) $x[m] = \sin\left(\frac{m}{5}\right)$

So, $x[m] =$

$$\left\{ ----, \sin\left(-\frac{2}{5}\right), \sin\left(\frac{-1}{5}\right), \sin(0), \sin\left(\frac{1}{5}\right), \sin\left(\frac{2}{5}\right), \sin\left(\frac{3}{5}\right), \sin\left(\frac{4}{5}\right), \sin(1), --- \right\}$$

$\sin\left(\frac{m}{5}\right)$ is periodic iff, $\frac{m}{5} = 2k\pi$, for $k \in I$

or, $\frac{m}{\pi} = 2k5$; which is not true, since denominator is irrational

So, $x[m] = \sin\left(\frac{m}{5}\right)$ is not periodic

Q) Consider the difference equation,

$$y(m) + \frac{1}{15} y(m-1) - \frac{2}{5} y(m-2) = x(m)$$

i) Determine the general form of the homogeneous solution to this equation.

ii) Find the impulse responses of both causal and anticausal LTI systems characterised by this equation.

iii) Show that causal LTI system is stable and the anti-causal LTI system is unstable.

iv) Find a particular solution when, $x(m) = \left(\frac{3}{5}\right)^m u(m)$

Sol i) The homogeneous solution $y_h[m]$ solves the difference equation when $x[m] = 0$. It is in the form $y_h[m] = \Sigma A (c)^m$, where the c's solve the equation of quadratic equation.

$$c^2 + \frac{1}{15}c - \frac{2}{5} = 0$$

So, for $c = \frac{1}{3}$ and $c = \frac{-2}{5}$, the general form for the homogeneous solution is:

$$y_h[m] = A_1\left(\frac{1}{3}\right)^m + A_2\left(-\frac{2}{5}\right)^m$$

ii) We use Z-transform, and use different ROCs to generate the causal and anti causal impulse responses:

$$H(z) = \frac{1}{\left(1-\frac{1}{3}z^{-1}\right)\left(1+\frac{2}{5}z^{-1}\right)}$$

$$= \frac{5/11}{1-\frac{1}{3}z^{-1}} + \frac{6/11}{1+\frac{2}{5}z^{-1}}$$

$$h_c[m] = \frac{5}{11}\left(\frac{1}{3}\right)^m u[m] + \frac{6}{11}\left(\frac{-2}{5}\right)^m u[m]$$

$$h_{ac}[m] = \frac{-5}{11}\left(\frac{1}{3}\right)^m u[-m-1] - \frac{6}{11}\left(\frac{-2}{5}\right)^m u[-m-1]$$

iii) Since $h_c[m]$ is causal, and the two exponential bases in $h_c[m]$ are both less than 1, it is absolutely summable. $h_{ac}[m]$ grows without bounds as m approaches $-\infty$.

$$= \frac{1}{1-\frac{3}{5}z^{-1}} \cdot \frac{1}{\left(1-\frac{1}{3}z^{-1}\right)\left(1+\frac{2}{5}z^{-1}\right)}$$

$$= \frac{-25/144}{1-1/3z^{-1}} + \frac{12/55}{1+2/5z^{-1}} + \frac{27/20}{1-3/5z^{-1}}$$

$$y[m] = \frac{-25}{44}\left(\frac{1}{3}\right)^m u[m] + \frac{55}{12}\left(\frac{-2}{5}\right)^m u[m] + \frac{27}{20}\left(\frac{3}{5}\right)^m u[m]$$

Q

a) Show that if $x_1[m]$ is an odd signal and $x_2[m]$ is an even signal, then $x_1[m]\, x_2[m]$ is an odd signal.

b) Let $x[m]$ be an arbitrary signal with even and odd parts denoted by,

$$x_e[m] = Ev\{x[m]\}$$
$$x_e[m] = Od\{x[m]\}$$

Show that, $\sum_{m=-\infty}^{\infty} x^2[m] = \sum_{m=-\infty}^{\infty} x^2_e[m] + \sum_{m=-\infty}^{\infty} x_o^2[m]$

Soln. a) If $x_1(m)$ is odd and $x_2(m)$ is even, ie.

$$x_1(-m) = -x_1(m)$$

and $x_2(-m) = x_2(m)$

Then, $x(m) = x_1(m)\, x_2(m) = -x_1(-m)\, x_2(-m) = -x(-m)$

Therefore, $x(m)$ is an odd signal.

Thus, the product of even and odd signals is an odd signal.

b) $$\sum_{m=-\infty}^{\infty} x^2(m) = \sum_{m=-\infty}^{\infty} [X_e(m) + X_o(m)]^2$$

$$= \sum_{m=-\infty}^{\infty} x_e^2(m) + \sum_{m=-\infty}^{\infty} x_o^2(m) + \sum_{m=-\infty}^{\infty} 2\, x_e(m) \cdot x_o(m)$$

Note that $x_e(m)\, x_o(m)$ is the product of an even sequence and an odd sequence and, therefore, the product is

odd. Because the sum for all n of an odd sequence is equal to zero.

$$\sum_{n=-\infty}^{\infty} 2x_e(n)\, x_o(n) = 0$$

Thus, power in $X(n)$ is,

$$\sum_{n=-\infty}^{\infty} x^2(n) = \sum_{n=-\infty}^{\infty} x_e^2(n) + \sum_{n=-\infty}^{\infty} x_o^2(n)$$

Q For the following input output relationships, determine whether the corresponding system is linear or not.

a) $y(t) = x^2(t)$

b) $y(n) = 2x(n) - 3$

a. $y(t) = x^2(t)$

$y(t) = a_1 y_1(t) + a_2 y_2(t)$

$y_1(t) = a_1 y_1(t)$

$y_2(t) = a_2 y_2(t)$

$x(t) = a_1 x_1(t) + a_2 x_2(t)$

$x^2(t) = a_1 x_1^2(t) + a_2 x_2^2(t)$

$y_1(t) = a_1 x_1^2(t)$ ——— (1)

$y_2(t) = a_2 x_2^2(t)$ ——— (2)

Adding equation (1) and (2)

$a_1 y_1(t) + a_2 y_2(t) = a_1 x_1^2(t) + a_2 x_2^2(t)$ — (3)

Putting $a_1 x_1(t)$ and $a_2 x_2(t)$ in eq^n $y(t) = x^2(t)$

$$a_1 y_1(t) + a_2 y_2(t) = [a_1 x_1(t) + a_2 x_2(t)]^2$$

$$a_1 y_1(t) + a_2 y_2(t) = a_1 x_1^2(t) + a_2 x_2^2(t) + 2 a_1 x_1(t) a_2 x_2(t) \quad \text{—— (4)}$$

$\because$ equation (3) $\neq$ equation (4)

$\therefore$ System is Non-Linear.

b) $y(n) = 2x(n) - 3$

Using Additivity property,

$y_1(n) = 2x_1(n) - 3$ —— (1)

$y_2(n) = 2x_2(n) - 3$ —— (2)

$x_1(n)$ —— $\boxed{y(n)}$ —— $3x_1(n) - 3$ —— (1)

$+$

$x_2(n)$ —— $\boxed{y(n)}$ —— $3x_2(n) - 3$ —— (2)

Adding both equations we get,

$3x_1(n) + 3x_2(n) - 6$ —— (3)

$x_3(n) = x_1(n) + x_2(n)$

$x_3(n)$ —— $\boxed{y(n)}$ —— $3x_3(n) - 3$ —— (4)

putting value of x_3 in eq^n (4)

$3[x_1(n) + x_2(n)] - 3$ —— (5)

eq^n (3) $\neq$ eq^n (5)

Non Linear

Numericals:-

Q.1

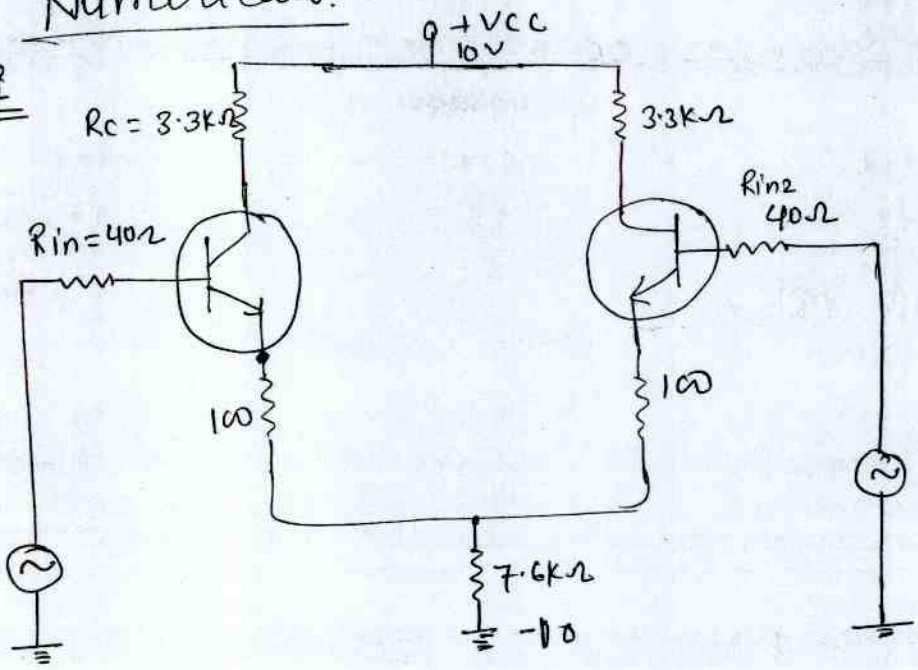

Determine the operating point (I_{CQ}, V_{CEQ})

$$I_{CQ} = \frac{V_{EE} - V_{BE}}{2R_E + R'_E + \frac{R_{in}}{\beta_{dc}}}$$

$$= .616\,mA$$

$$V_{CEQ} = \cancel{V_C + V_E}\ V_C - V_E$$

$$V_C = V_{CC} - I_{CQ} R_C + V_{BE}$$

$$= 8.67\,V$$

b) $$r_e = \frac{25\,mV}{I_E} = 40.58\,\Omega$$

$$A_d = \frac{R_C}{r_e + R'_E}$$

$$R_{i_1} = 2\beta_{ac}(r_e + R'_E)$$

Q.2.

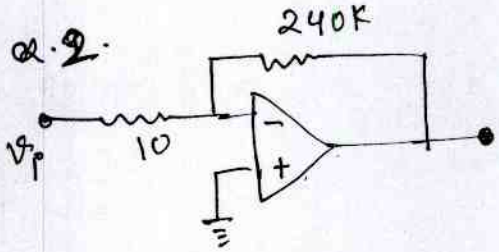

SR = .5V/μsec

v_m = .02V

Find f_m =

Q.3 : SR = 2V/μsec max A_{cl} that can be used when i/p sig changes by .5V in 10 μs.

Q.4

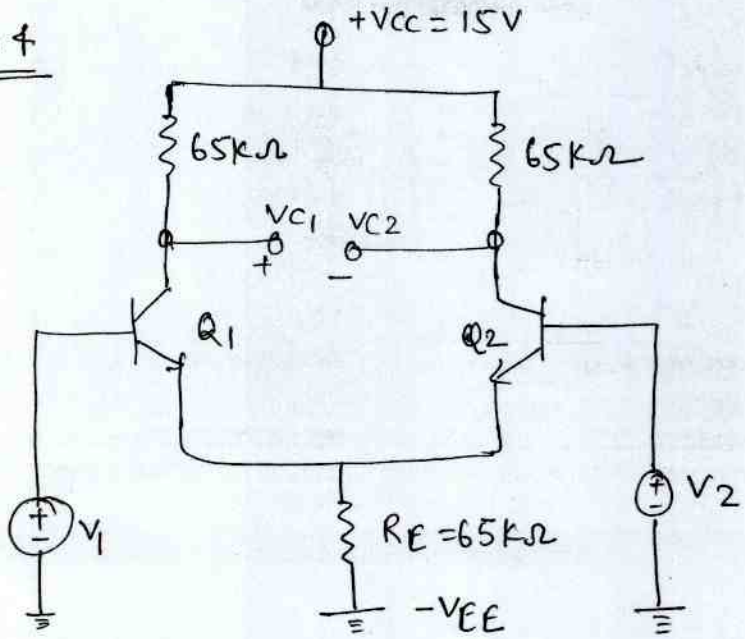

Find the Q point Vc and IB for the differential amplifier.

Solⁿ

$$I_E = \frac{V_{EE} - V_{BE}}{2R_E} = 110\mu A$$

$$I_C = \alpha I_E$$

$$I_B = \frac{I_C}{\beta} = 1.089\mu A$$

$$V_C = V_{CC} - I_C R_C$$

$$= 7.92V$$

$$V_{CE} = V_C - V_E$$

$$7.92 - (-.7)$$

$$= 8.62V$$

Q.5 $R_i = 10k\Omega$ $V_i = 1V$ $R_L = 25\Omega$

Calculate i) I_1 ii) V_0 Raj-2003

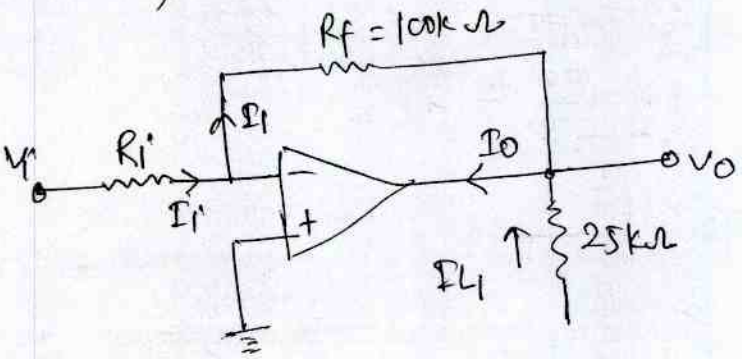

$$A_f = \frac{R_f}{R_i}$$

$$V_0 = -\frac{R_f}{R_i} V_{in}$$

$$V_0 = -10V$$

$$I_i = ?$$

$$V_1 - V_0 = (R_f + R_1) I_1$$

$$I_1 = \frac{V_1 - V_0}{R_f + R_1}$$

$$I_1 = \frac{1 - (-10)}{(100+10)\,k\Omega} = .1mA$$

$$I_L = \frac{V_0}{R_L}$$

$$= .4mA$$

$$I_0 = I_i + I_L$$

$$= .5mA$$

Ques 6

Calculate the output V_o

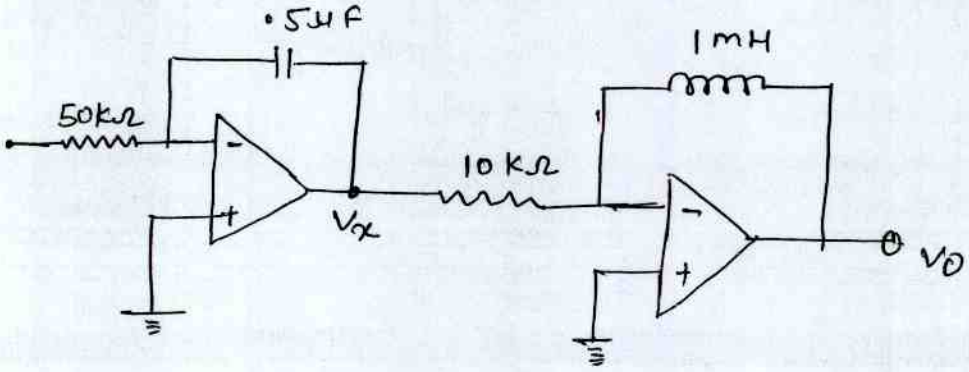

a) $.04 \cos 100t$ mV b) $.2 \sin 100t$ V

c) $-4 \cos 100t$ mV d) $-4 \sin 100t$ V.

Ques 7 :-

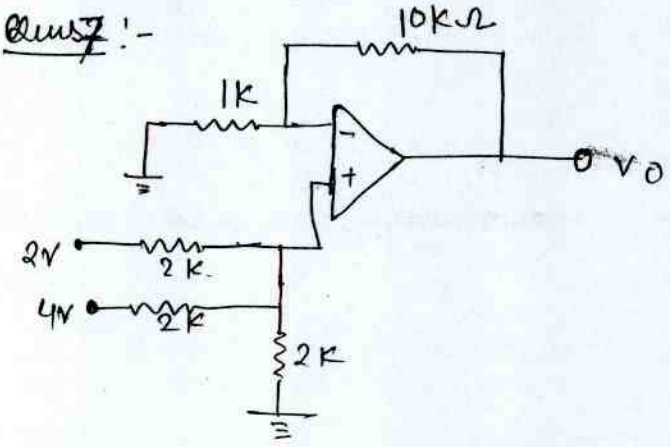

a) 11V b) 33V c) 22V d) 5.5V

Ques8:-

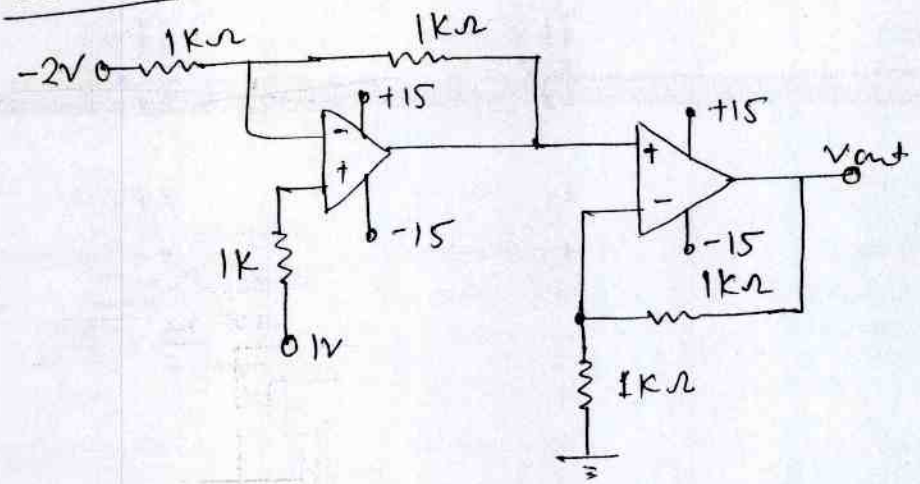

Gate 2013

A) 4 B) 6 C) 8 D) 10

Ques9:

Vo ??

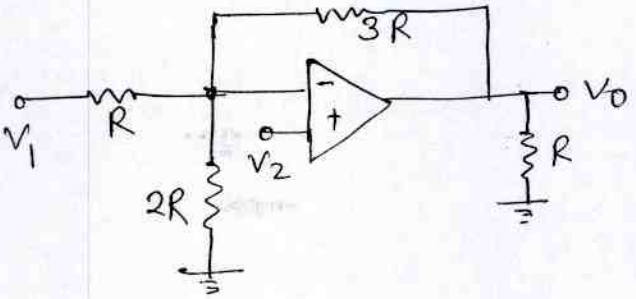

A) $\frac{5}{2}V_1 - 3V_2$ B) $2V_1 - \frac{5}{2}V_2$

C) $-\frac{3}{2}V_1 + \frac{7}{2}V_2$ D) $-\frac{3}{2}V_1 + \frac{11}{2}V_2$

Qus 10

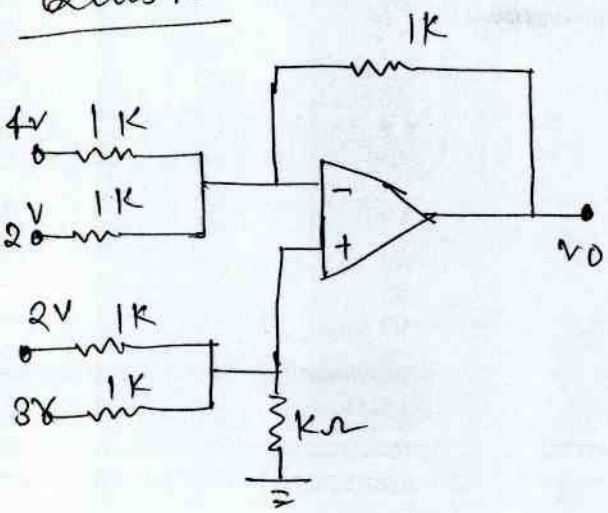

Vo ??

a) -1V b) +1V c) 0V D) 2V

Qus 11!

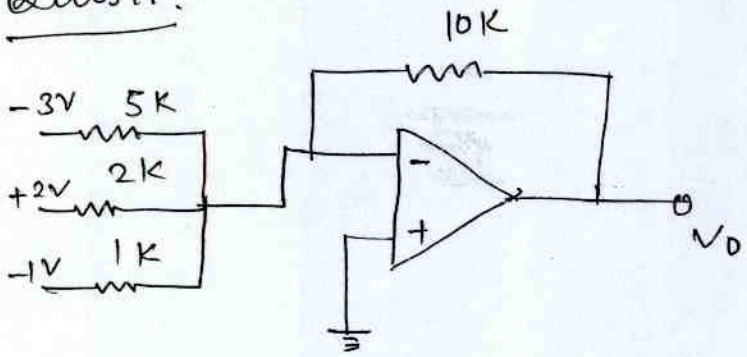

A) 0V B) 6V C) -6V D) -14V

Qus 12

What is the current Ix of the figure

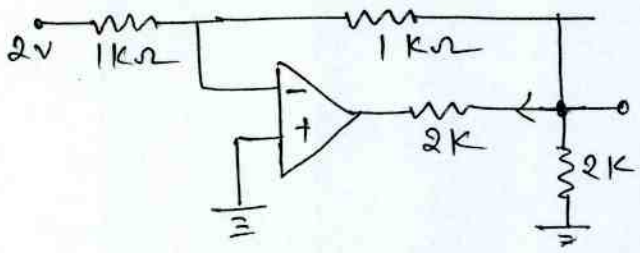

A) 3mA B) 2mA C) 1.5mA D) 0

Ques 13

In the op-Amp circuit given in the load current i_L is

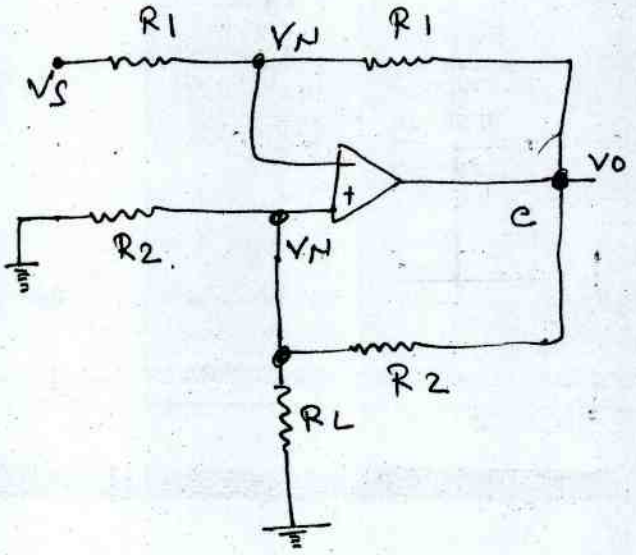

a) $-V_S/R_2$ b) V_S/R_2 c) $-V_S/R_L$ d) V_S/R_1

GATE 2007

Ques 14

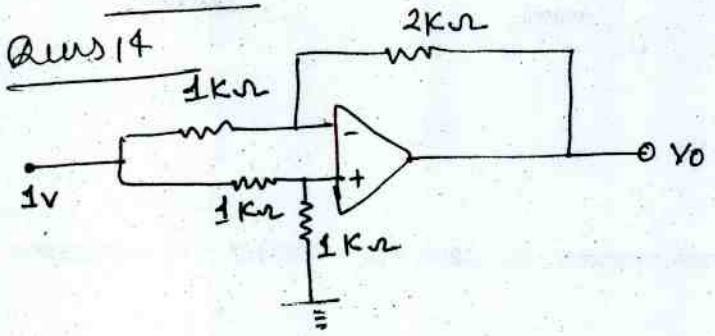

a) -2 b) -1 c) $-.5$ d) $.5$

GATE 2010) Ques 15

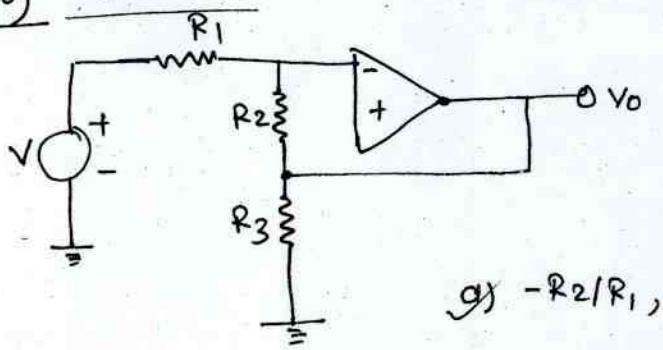

a) $-R_2/R_1$, b) $-R_3/R_1$

c) $-(R_2 \| R_3)/R_1$ d) $-(R_2+R_3)/R_1$

Ques 16

GATE 2013

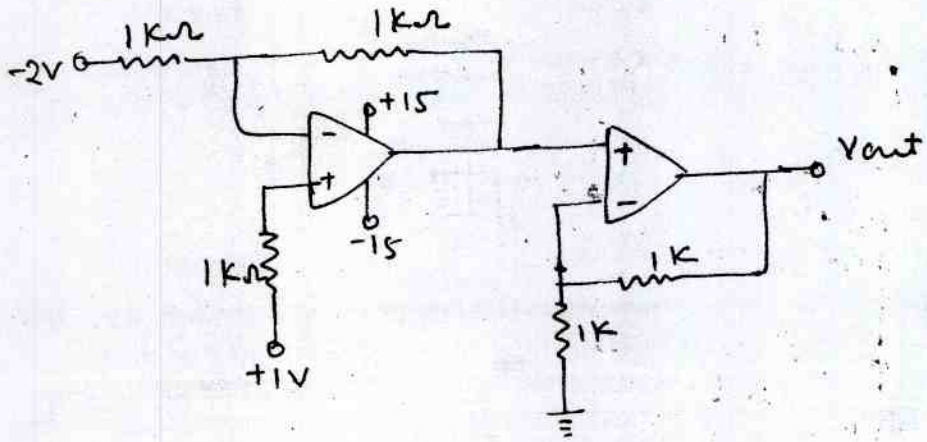

Find out Vout

a) 4V b) 6V c) 8V d) 10V

Ques 17

2014 (GATE)

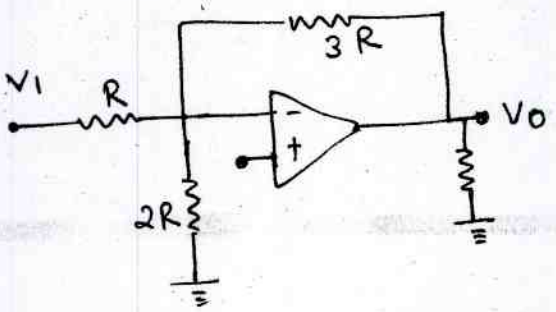

a) $\frac{5}{2}V_1 - 3V_2$ b) $2V_1 - \frac{5}{2}V_2$ c)

c) $-\frac{3}{2}V_1 + \frac{7}{2}V_2$ d) $-3V_1 + \frac{11}{2}V_2$

sequential logic ckt's. - sheet -①

CHAPTER-3

GATE-ELECTRONICS-2000-2012

1. A sequential circuit using D Flip-Flop and logic gates is shown in figure, where X and Y are the inputs and Z is the output. The circuit is

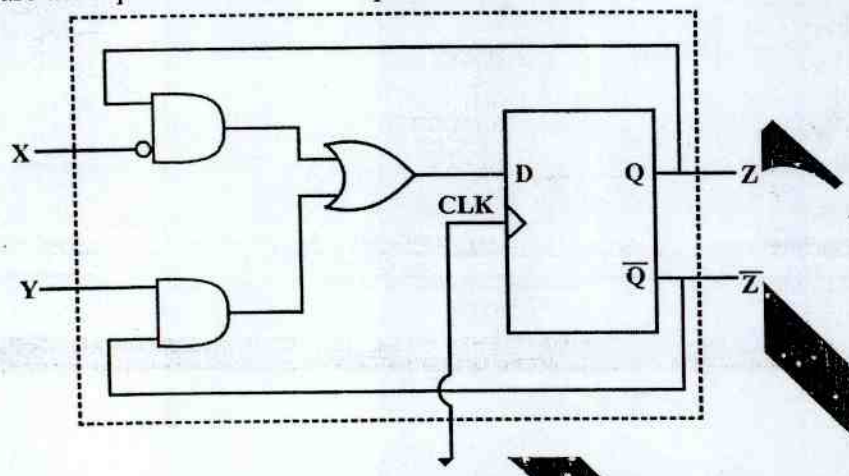

(a) S-R Flip-Flop with inputs X = R and Y =
(b) S – R Flip-Flop with inputs X = S and Y = R
(c) J – K Flip-Flop with inputs X = J and Y = K
(d) J-K flip-Flop with inputs X = K and Y = J

GATE- EC –00

2. In given figure the J and K inputs of all the four Flip-Flops are made high. The frequency of the signal at output Y is

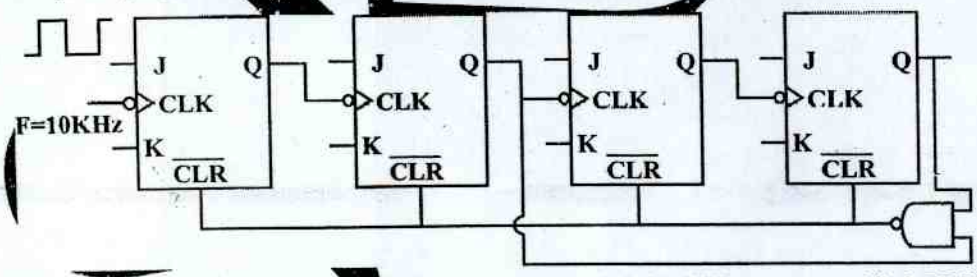

(a) 0.833 KHz (b) [illegible] KHz (c) 0.91 KHz (d) 0.77 KHz

GATE- EC –00

3. The digital block in the figure, realized using two positive edge triggered D-flip flops. Assume that for $t < t_0$, $Q_1 = Q_2 = 0$. The circuit in the digital block is given by

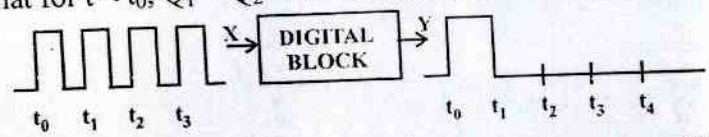

(A)

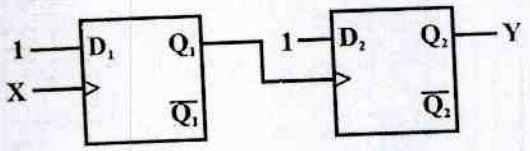

(B)

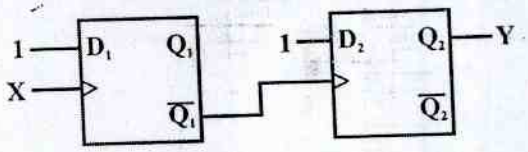

(C)

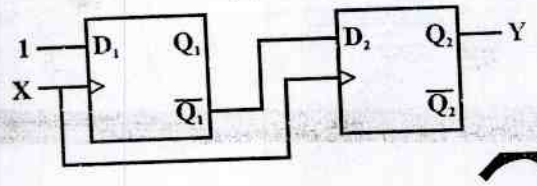

(D)

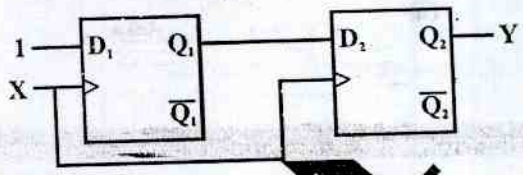

GATE-EC-01

4. A 0 to 6 counter consists of [illegible] flip flops and a combination circuit of 2 input gate(s). The combination circuit consists of

(A) One AND gate
(B) One [illegible] gate
(C) One AND gate and one [illegible]R gate
(D) Two [illegible] gates

GATE-EC-03

5. A 4 bit ripple [illegible]r and a [illegible] bit synchronous counter are made using flip flops having a propagation delay [illegible]0 ns [illegible]ach. If the worst case delay in the ripple counter and the synchronous counter [illegible] are [illegible] respectively then

(A) R = [illegible]0 ns, S = 40 ns
(B) R = 40 ns, S = 10 ns
(C) R = 10 ns, S = 30 ns
(D) R = 30 ns, S = 10 ns

GATE-EC-03

6. Choose the correct one from among the alternatives A, B, C, D after matching an item from Group 1 with the most appropriate item in Group 2.

Group-1

P. [illegible] register
Q. Counter
R. Decoder

Group-2

1. Frequency division
2. Addressing in memory chips
3. Serial to parallel data conversion

(A) P-3, Q-2, R-1
(B) P-3, Q-1, R-2
(C) P-2, Q-1, R-3
(D) P-1, Q-2, R-2

GATE-EC-04

7. In the modulo-6 ripple counter shown in the given figure, the output of the 2-input gate is used to clear the J-K flip-flops.

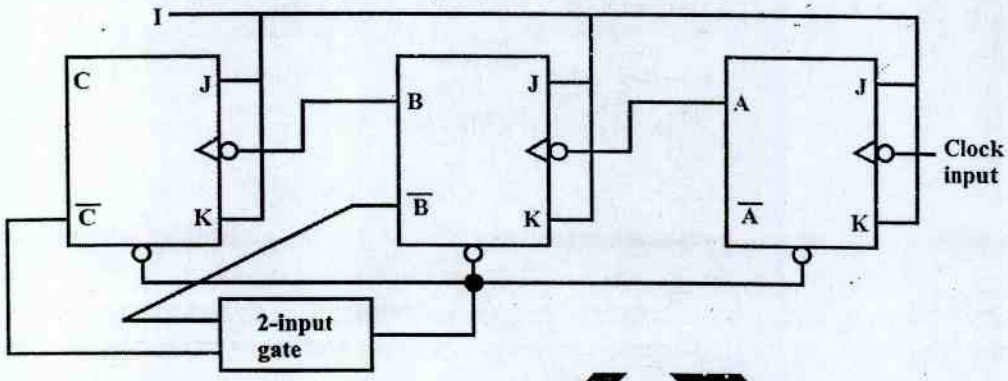

The 2-input gate is
(A) A NAND gate (B) A NOR gate (C) An OR gate (D) An AND gate

GATE-EC-04

8. The present output Q_n of an edge triggered JK flip-flop is logic 0. If J=1, then Q_{n+1}
(A) Cannot be determined (B) Will be logic 0
(C) Will be logic 1 (D) Will race around

GATE-EC-05

9. The given figure shows a ripple counter using negative edge triggered flip-flops. If the present state of the counter is $Q_2\ Q_1\ Q_0 = 011$, then its next state ($Q_2\ Q_1\ Q_0$) will be

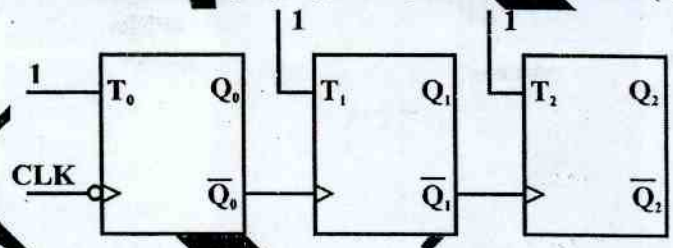

(A) 010 (B) 100 (C) 111 (D) 101

GATE-EC-05

10. For the circuit shown in figure below, two 4- bit parallel – in serial – out shift registers loaded with the data shown are used to feed the data to a full adder. Initially, all the flip – flops are in clear state. After applying two clock pulse, the outputs of the full – adder should be

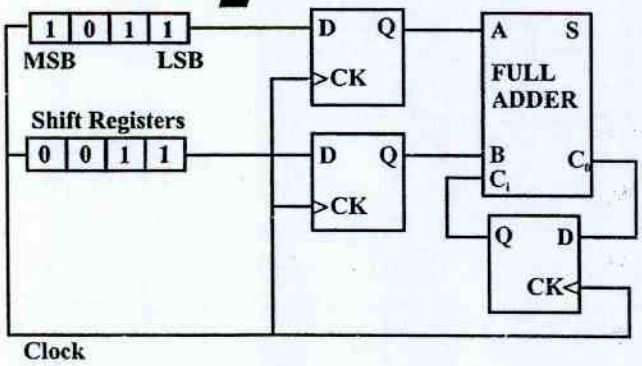

(A) S = 0 C_0 = 0 (B)S = 0 C_0 = 1 (C) S = 1 C_0 = 0 (D) S = 1 C_0 = 1

GATE – EC-06

11. Two D – flip – flops, as shown below, are to be connected as a synchronous counter that goes through the following Q_1Q_0 sequence

$00 \rightarrow 01 \rightarrow 11 \rightarrow 10 \rightarrow 00 \rightarrow \ldots\ldots$

The inputs D_0 and D_1 respectively should be connected as

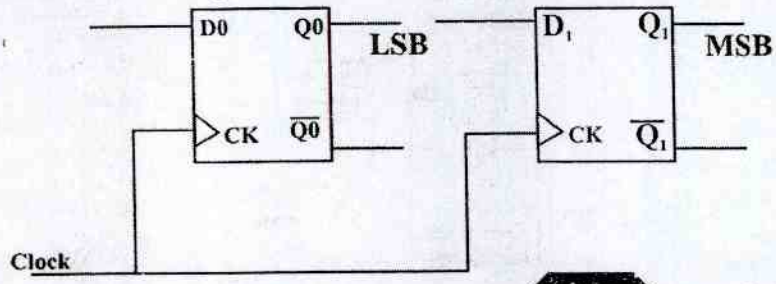

(A) $\overline{Q_1}$ and Q_0 (B) $\overline{Q_0}$ and Q_1 (C) $\overline{Q_1}$ Q_0 and $\overline{Q_0}$ Q_0 (D) $\overline{Q_1}$ $\overline{Q_0}$ and Q_1Q_0

GATE – EC-06

12. The following binary values were applied to the X and Y inputs of the NAND latch shown in the figure in the sequence indicated below:

X = 0, Y = 1; X = 1, Y = 0; X = 1, Y = 1

The corresponding stable P, Q outputs will be

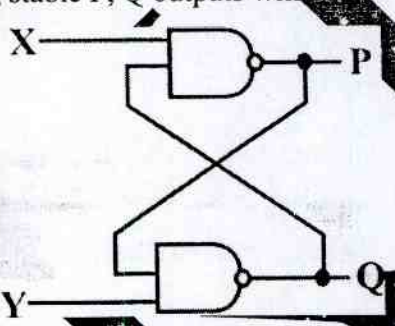

(A) P = 1, Q = 0; P = 1, Q = 0; P = 1, Q = 0 or P = 0, Q = 1
(B) P = 1, Q = 0; P = 0, Q = 1; or P = 0, Q = 1; P = 0, Q = 1
(C) P = 1, Q = 0; P = 1, Q = 1 P = 1, Q = 0 or P = 0, Q = 1
(D) P = 1, Q = 0; P = 1, Q = 1; P = 1, Q = 1

GATE – EC-07

13. For the circuit shown, the counter state (Q_1Q_0) follows the sequence

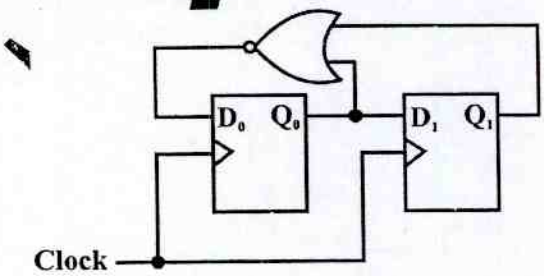

(A) 00, 01, 10, 11, 00,... (B) 00, 01, 10, 00, 01.....
(C) 00, 01, 11, 00, 01.... (D) 00, 10, 11, 00, 10....

GATE–EC-07, IES-EC-10

14. For each of the positive edge-triggered J-K flip flop used in the following figure, the propagation delay is ΔT.

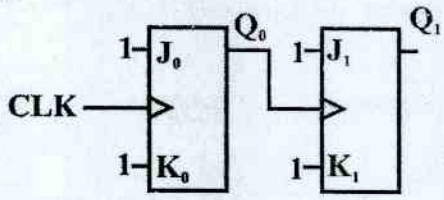

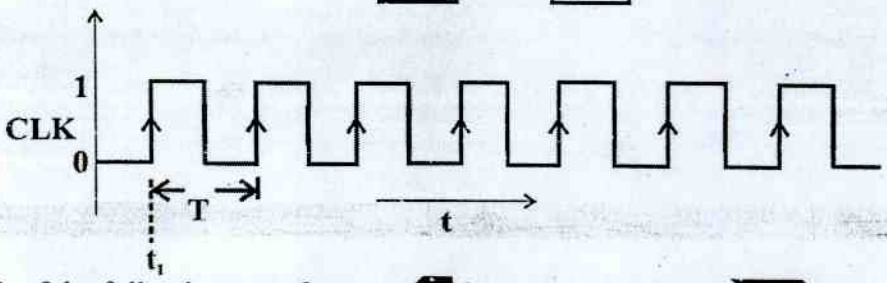

Which of the following waveforms correctly represents the output at Q_1?

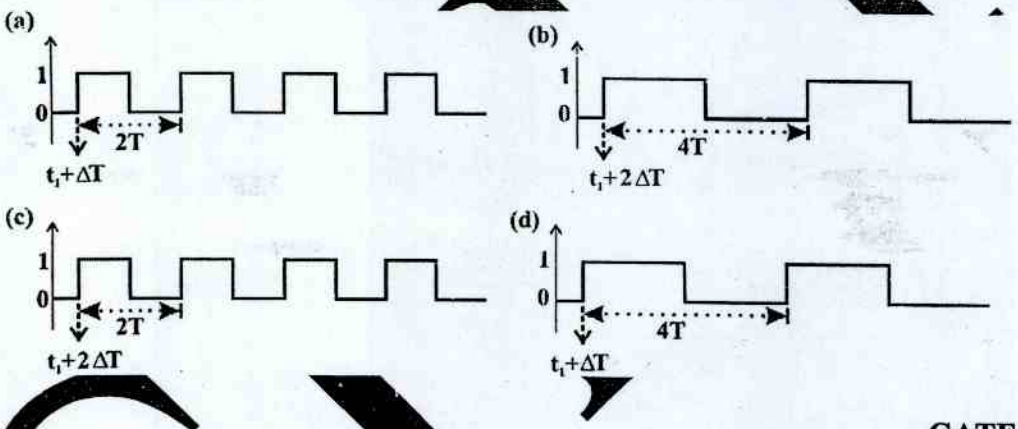

GATE –EC-08

15. For the circuit shown in the figure, Q has a transition from 0 to 1 after CLK changes from 1 to 0. Assume gate delays to be negligible.

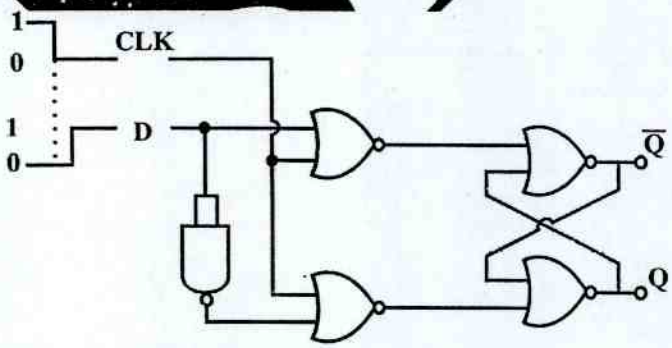

Which of the following statements is true?

(A) Q goes to 1 at the CLK transition and stays at 1.

(B) Q goes to 0 at the CLK transition and stays at 0.

(C) Q goes to 1 at the CLK transition and goes to 0 when D goes to 1.

(D) Q goes to 0 at the CLK transition and goes to 1 when D goes to 1.

GATE –EC-08

16. Refer to the NAND and NOR latches shown in the figure. The inputs (P_1, P_2) for both the latches are first made (0, 1) and then, after a few seconds, made (1, 1). The corresponding stable outputs (Q_1, Q_2) are

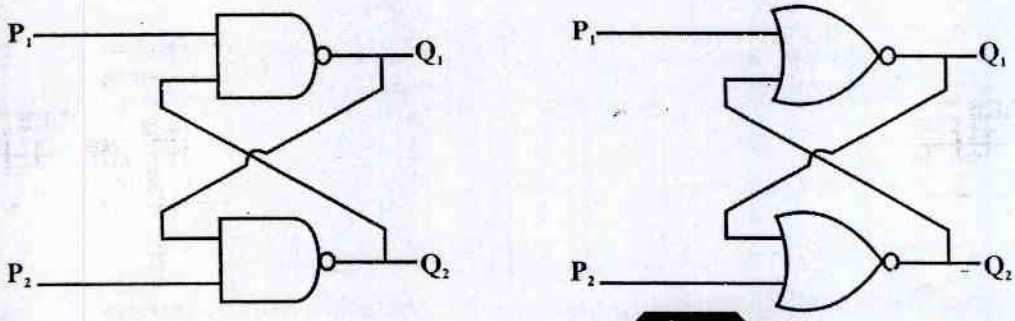

(A) NAND: first (0, 1) then (0, 1) NOR: first (1, 0) then (0, 0)
(B) NAND: first (1, 0) then (1, 0) NOR: first (1, 0) then (1, 0)
(C) NAND: first (1, 0) then (1, 0) NOR: first (1, 0) then (0, 0)
(D) NAND: first (1, 0) then (1, 1) NOR: first (0, 1) then (0, 1)

GATE-EC-09

17. What are the counting states (Q_1, Q_2) for the counter shown in the figure below?

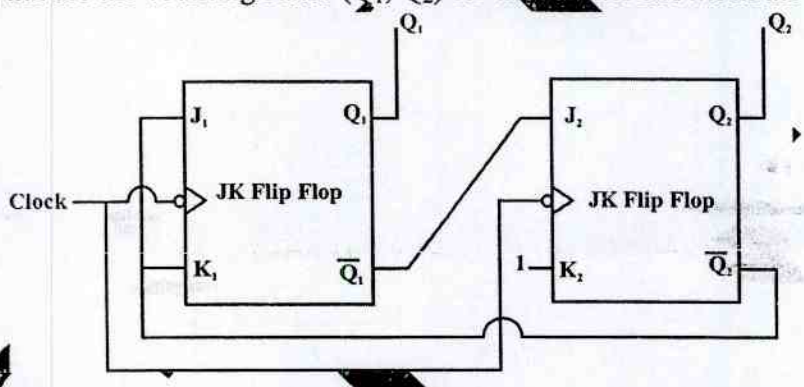

(A) 11, 10, 00, 11, 10,.... (B) 01, 10, 11, 00, 01,....
(C) 00, 11, 01, 10, 00,.... (D) 01, 10, 00, 01, 10,....

GATE-EC-09

18. Assuming that all flip-flops are in reset condition initially, the count sequence observed at Q_A in the circuit shown is

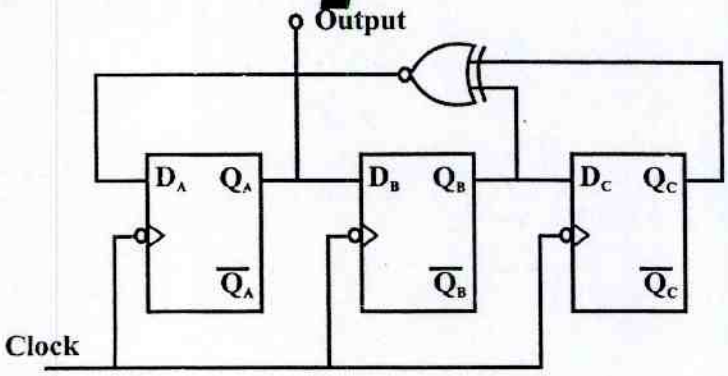

(A) 0010111.... (B) 0001011..... (C) 0101111..... (D) 0110100....

Seq. logic ckt's. – sheet – (R)

GATE - EC-10

19. When the output Y in the circuit below is "1", it implies that data has.

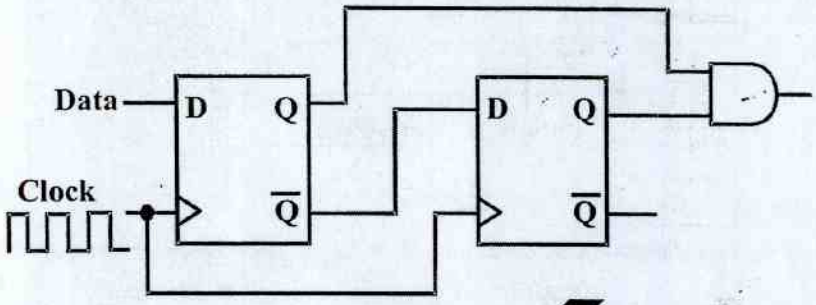

(A) Changed from "0" to "1"
(B) Changed from "1" to "0"
(C) Changed in either direction
(D) Not changed

GATE – EC- 11

20. Two D flip-flops are connected as a synchronous counter that goes through the following Q_BA_A sequence 00→11→01→10→00→..... The connections to the inputs D_A and D_B are

(A) $D_A = Q_B$, $D_B = Q_A$
(B) $D_A = Q_A$, $D_B = Q_B$
(C) $D_A = (Q_A \overline{Q}_B + \overline{Q}_A Q_B)$, $D_B = Q_A$
(D) $D_A = (Q_A Q_B + \overline{Q}_A \overline{Q}_B)$, $D_B = \overline{Q}_B$

GATE –EC-11

GATE-ELECTRICAL-2000-2012

21. The frequency of the clock signal applied to the rising edge triggered D flip-flop shown in Fig. is 10 kHz. The frequency of the signal available at Q is

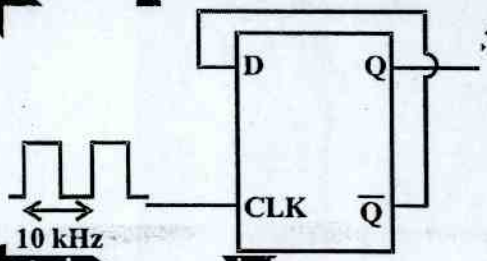

(a) 10 kHz
(b) 5 kHz
(c) 20 kHz
(d) 5 kHz

GATE-EE-02, IES-EE-07

22. The shift register shown in Fig. is initially loaded with the bit pattern 1010. Subsequently the shift register is cocked and with each clock pulse the pattern gets shifted by one bit position to the right. With each shift, the bit at the serial input is pushed to the left most position (msb). After how may clock pulses will the content of the shift register become 1010 again?

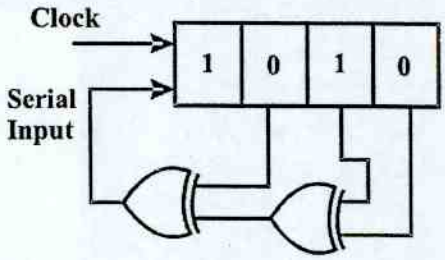

(A) 3
(B) 7
(C) 11
(D) 15

GATE-EE-03

23. An X-Y flip flop, whose Characteristic Table is given below is to be implemented using a J-K flip flop
This can be done by making

X	Y	Q_{n+1}
0	0	1
0	1	Q_n
1	0	$\overline{Q}_n$
1	1	0

This can be done by making

(A) J =X, K = $\overline{Y}$ (B) $J = \overline{X}, K = Y$ (C) $J = 1, K = \overline{X}$ (D) $J = \overline{Y}, K = X$

GATE-EE-03, IES-EC-10

24. The digital circuit shown in Fig. generates a modified clock pulse at the output. Choose the correct output waveform from the options given below.

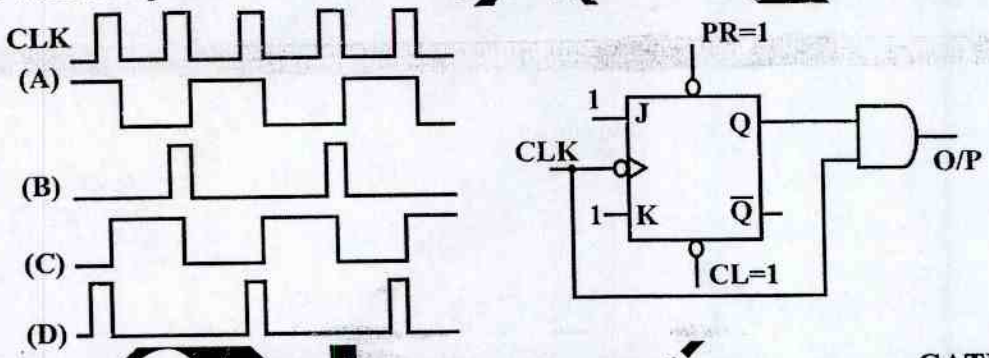

GATE-EE-04

25. The digital circuit sho[illegible]

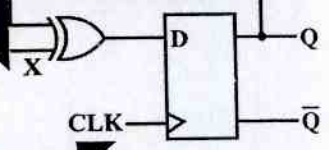

(A) JK flip-flop (B) [illegible]ocked RS flip-flop (C) T flip-flop (D) Ring Counter

GATE-EE-05

26. A two-bit counter circuit is shown below.

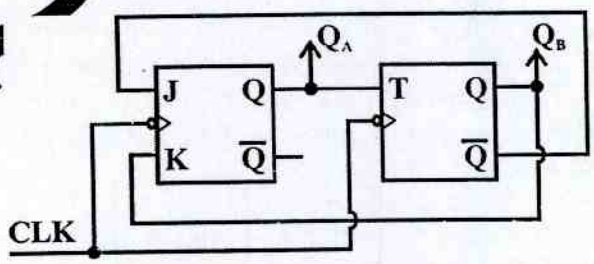

If the state Q_AQ_B of the counter at the clock time t_n is "10" then the state Q_AQ_B of the counter at $t_n + 3$ (after three clock cycles) will be

(A) 00 (B) 01 (C) 10 (D) 11

GATE-EE-11

27. Consider the given circuit

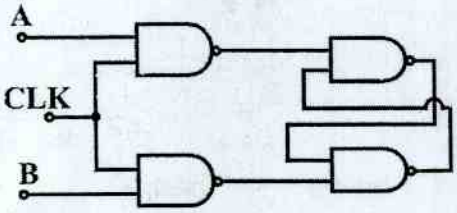

In this circuit, the race around

(A) Does not occur
(B) Occurs when CLK = 0
(C) Occurs when CLK = 1 and A = B = 1
(D) Occurs when CLK = 1 and A = B = 0

GATE—EE-12

28. The state transition diagram for the logic circuit shown is

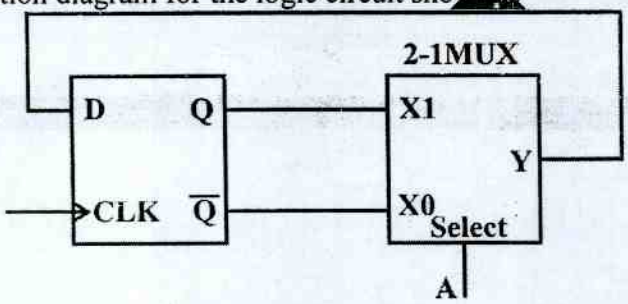

(A)

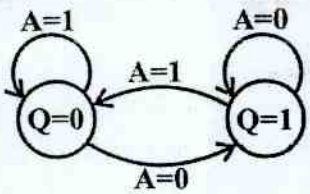

(B)

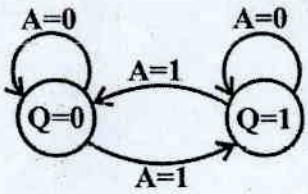

(C)

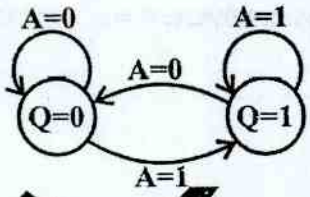

(D)

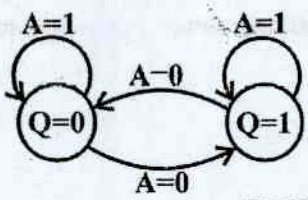

GATE-EC/EE-12

29. The following arrangement of master-slave flip flops

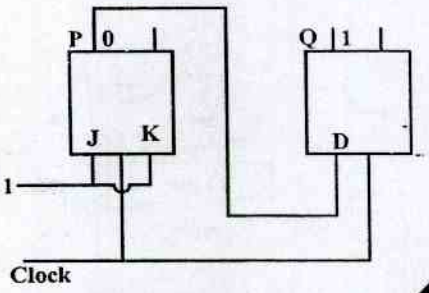

has the initial state of P, Q as 0, 1 (respectively). After three clock cycles the output state P, Q is(respectively),

(a) 1,0 (b) 1,1 (c) 0,0 (d) 0,1

GATE-CS-00

30. Consider the circuit given below 2 with initial state $Q_0 = 1$, $Q_1 = Q_2 = 0$. The state of the circuit is given by the value $4Q_1 + 2Q_2 + Q_0$

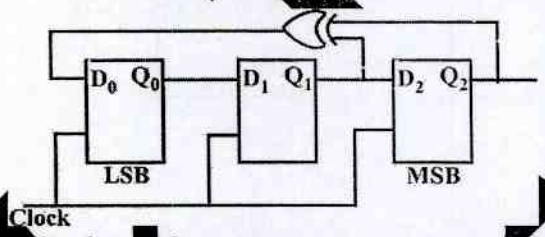

Which one of the following is the correct state sequence of the circuit?

(a) 1, 3, 4, 6, 7, 5, 2 (b) 1, 2, 5, 3, 7, 6, 4

(c) 1, 2, 7, 3,5, 6, 4 (d) 1, 4, 6, 7, 3, 5, 2

GATE-CS-01

31. In an SR latch made by cross coupling two NAND gates, if both S and R inputs are set to 0, then it will result in

(a) Q = 0, Q` = 1 (b) Q = 1, Q` = 0

(c) Q = 1, Q` = 1 (d) Indeterminate states

GATE-CS-04

32. Consider the partial implementation of a 2-bit counter using T flip-flops following the sequence 0-2-3-1-0, as shown below.

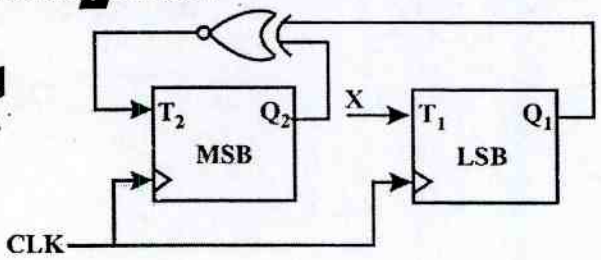

To complete the circuit, the input X should be

(a) Q_2` (b) $Q_2 + Q_1$ (c) $(Q_1 \oplus Q_2)$` (d) $Q_1 \oplus Q_2$

GATE-CS-04

33. Consider the following circuit involving a positive edge triggered D FF.
Consider the following timing diagram. Let A_i represent the logic level on the line A in the i-th clock period.

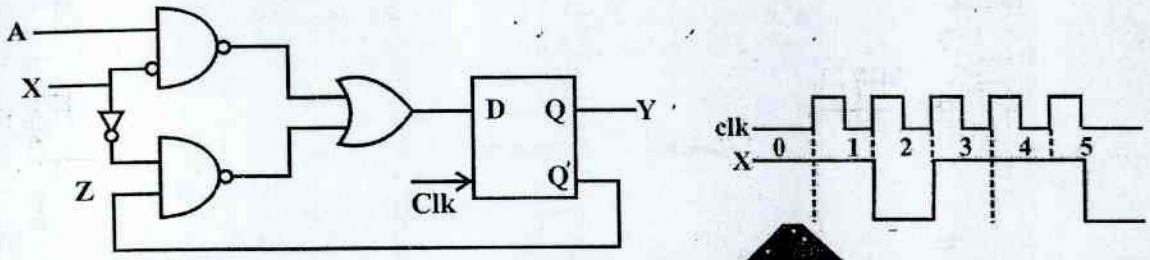

Let A` represent the complement of A. The correct output sequence on Y over the clock periods 1 through 5 is

(a) $A_0\ A_1\ A_1`\ A_3\ A_4$ (b) $A_0\ A_1\ A_2`\ A_3\ A_4$
(c) $A_1\ A_2\ A_2`\ A_3\ A_4$ (d) $A_1\ A_2`\ A_3\ A_4\ A_5`$

GATE-CS-05

34. Consider the following circuit
The flip-flops are positive edge triggered D FFs. Each state is designated as a two bit string Q_0Q_1. Let the initial state be 00. The state transition sequence is:

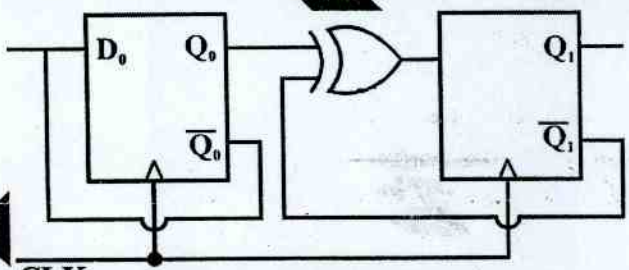

(a) $00 \rightarrow 11 \rightarrow 01$ (b) $00 \rightarrow 11 \rightarrow 01 \rightarrow 11$ (d) $00 \rightarrow 11 \rightarrow 01 \rightarrow 10$

GATE-CS-05

35. Consider the circuit in the diagram. The ⊕ operator represents Ex – OR. The D flip-flops are initialized to zero (cleared).

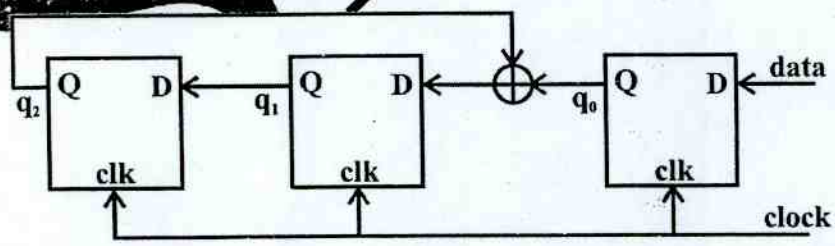

The following data: 100110000 is supplied to the "data" terminal in nine clock cycles. After that the values of $q_2q_1q_0$ are

(a) 000 (b) 001 (c) 010 (d) 101

GATE-CS-06

36. The control signal functions of a 4-bit binary counter are given below (where X is "don't care"):

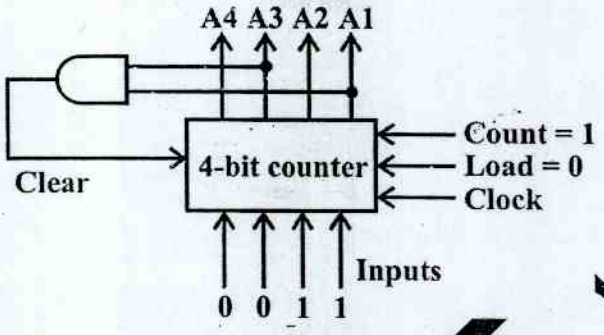

Clear	Clock	Load	Count	Function
1	X	X	X	Clear to 0
0	X	0	0	No change
0	↑	1	X	Load input
0	↑	0	1	Count next

The counter is connected as follows:
Assume that the counter and gate delays are negligible. If the counter starts at 0, then it cycles through the following sequence:

(a) 0, 3, 4 (b) 0, 3, 4, 5
(c) 0, 1, 2, 3, 4 (d) 0, 1, 2, 3, 4, 5

GATE-CS-07

37. In the sequential circuit shown below, it the initial value of the output Q_1Q_0 is 00, what are the next four values of Q_1Q_0?

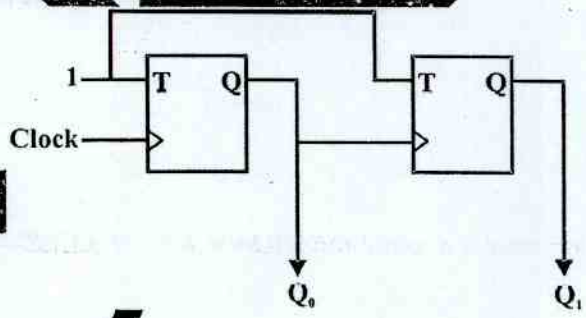

(a) 11, 10, 01, 00 (b) 10, 11, 01, 00 (c) 10, 00, 01, 11 (d) 11, 10, 00, 01

GATE-CS-10

38. The minimum number of D flip-flops needed to design a mod-258 counter is

(a) 9 (b) 8 (c) 512 (d) 258

GATE-CS-11

GATE QUESTIONS (NETWORK THEORY)

Q1. The minimum numbers of equation to analyze the circuit-_____.

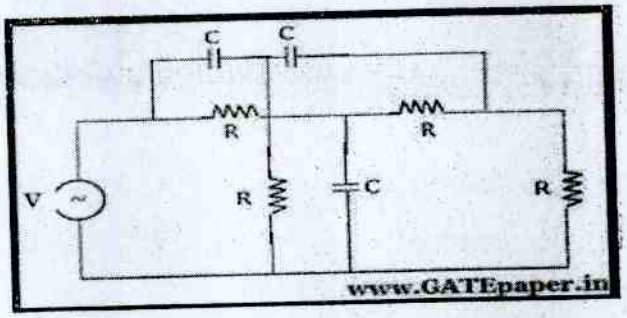

a.**3** b.4 c.6 d.7

Q2.If $V_A - V_B = 6V$, then $V_C - V_D$=_____.

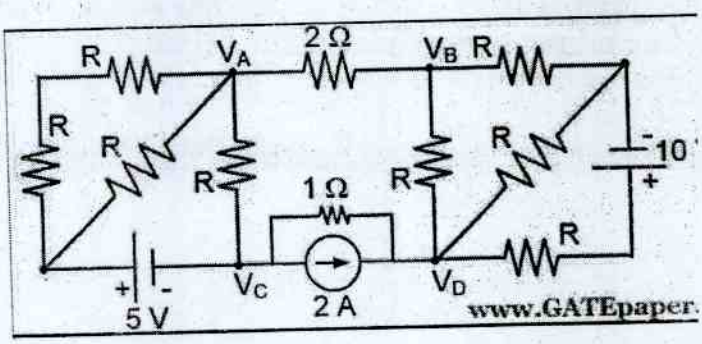

Q.3 For the circuit given in the figure, the voltage Vc (in volts) across the capacitor is

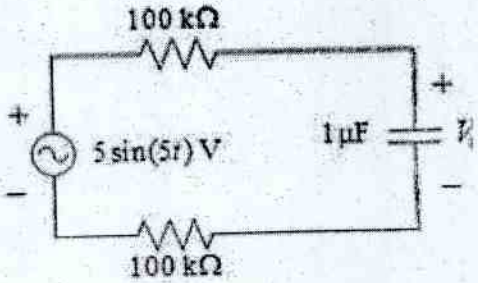

(A) $1.25\sqrt{2}\sin(5t-0.25\pi)$ (B) $1.25\sqrt{2}\sin(5t-0.125\pi)$

(C) $2.5\sqrt{2}\sin(5t-0.25\pi)$ (D) $2.5\sqrt{2}\sin(5t-0.125\pi)$

Q.4 For the circuit given in the figure, the magnitude of the loop current (in amperes, correct to three decimal places) 0.5 second after closing the switch is _____.

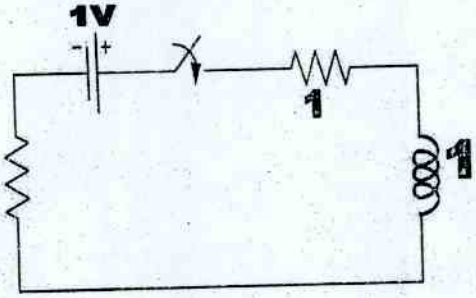

Q.5 Consider the network shown below with $_1 = 1\Omega$, $_2 = 2\Omega$ and $_3 = 3\Omega$. The network is connected to a constant voltage source of 11V.The magnitude of the current (in amperes, accurate to two decimal places) through the source is _____.

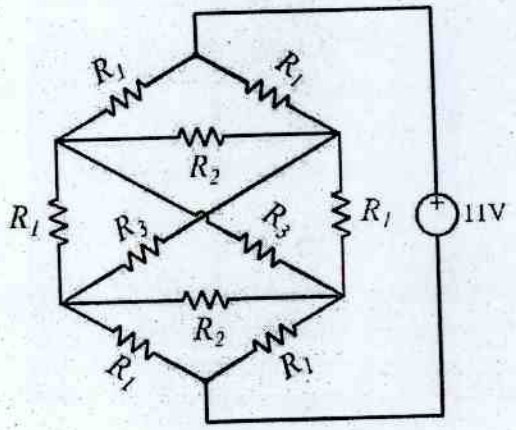

Q.7 Consider the configuration shown in the figure which is a portion of a larger electrical network

For R = 1 Ω and currents i1 = 2 A, i4 = −1 A,i5 = −4 A, which one of the following is TRUE?

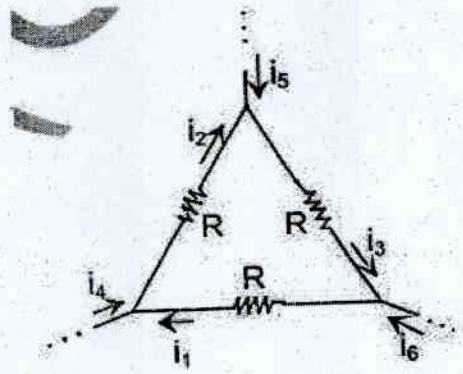

(A) i6 = 5 A

(B) i3 = −4 A

(C) Data is sufficient to conclude that the supposed currents are impossible

(D) Data is insufficient to identify the currents i2, i3, and i6

A source $v_s(t) = V\cos 100\pi t$ has an internal impedance of $(4+j3)\Omega$. If a purely resistive load connected to this source has to extract the maximum power out of the source, its value in Ω should be

(A) 3 (B) 4 (C) 5 (D) 7

2 mH inductor with some initial current can be represented as shown below, here s is the Laplace Transform variable. The value of initial current is

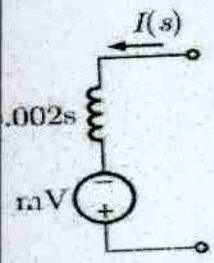

(A) 0.5 A
(B) 2.0 A
(C) 1.0 A
(D) 0.0 A

In the figure shown below, assume that all the capacitors are initially uncharged. If $v_i(t) = 10u(t)$ Volts, $v_o(t)$ is given by

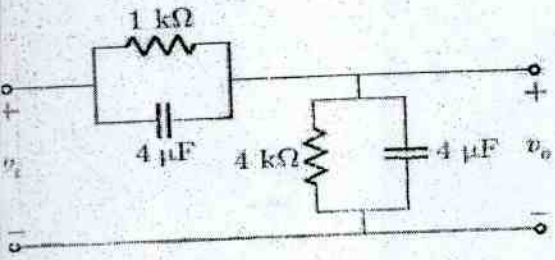

(A) $8e^{-t/0.004}$ Volts
(B) $8(1 - e^{-t/0.004})$ Volts
(C) $8u(t)$ Volts
(D) 8 Volts

The circuit shown in the figure has initial current $i_L(0^-) = 1$ A through the inductor and an initial voltage $v_C(0^-) = -1$ V across the capacitor. For input $v(t) = u(t)$, the Laplace transform of the current $i(t)$ for $t \geq 0$ is

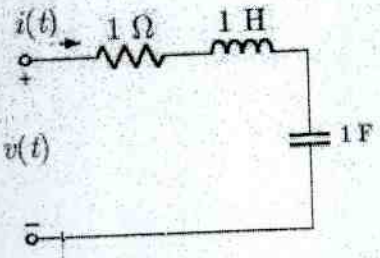

(A) $\frac{s}{s^2+s+1}$
(B) $\frac{s+2}{s^2+s+1}$
(C) $\frac{s-2}{s^2+s+1}$
(D) $\frac{1}{s^2+s+1}$

The differential equation for the current $i(t)$ in the circuit of the figure is

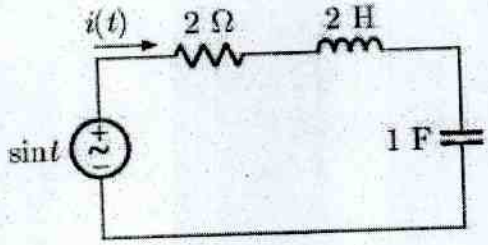

(A) $2\frac{d^2i}{dt^2}+2\frac{di}{dt}+i(t)=\sin t$

(B) $\frac{d^2i}{dt^2}+2\frac{di}{dt}+2i(t)=\cos t$

(C) $2\frac{d^2i}{dt^2}+2\frac{di}{dt}+i(t)=\cos t$

(D) $\frac{d^2i}{dt^2}+2\frac{di}{dt}+2i(t)=\sin t$

An input voltage $v(t)=10\sqrt{2}\cos(t+10^\circ)+10\sqrt{5}\cos(2t+10^\circ)$ V is applied to a series combination of resistance $R=1\,\Omega$ and an inductance $L=1$ H. The resulting steady-state current $i(t)$ in ampere is

(A) $10\cos(t+55^\circ)+10\cos(2t+10^\circ+\tan^{-1}2)$

(B) $10\cos(t+55^\circ)+10\sqrt{\frac{3}{2}}\cos(2t+55^\circ)$

(C) $10\cos(t-35^\circ)+10\cos(2t+10^\circ-\tan^{-1}2)$

(D) $10\cos(t-35^\circ)+\sqrt{\frac{3}{2}}\cos(2t-35^\circ)$

An independent voltage source in series with an impedance $Z_s=R_s+jX_s$ delivers a maximum average power to a load impedance Z_L when

(A) $Z_L=R_s+jX_s$

(B) $Z_L=R_s$

(C) $Z_L=jX_s$

(D) $Z_L=R_s-jX_s$

Swami Keshvanand Institute of Technology Management &Gramothan, Jaipur

CLASS TEST-2 B.TECH. V SEM. ECE (Section A)

5EC1A SIGNAL AND SYSTEM

Max Marks: 20 Answers:

1.		2.		3.		4.		5.	
6.		7.		8.		9.		10.	
11.		12.		13.		14.		15	
16.		17.		18.		19.		20	

1. The Fourier transform of a real valued time signal has
   (a) odd symmetry (b) even symmetry
   (c) conjugate symmetry (d)no symmetry

2. The Fourier Transform of the signal $y(t) = e^{-3t^2}$ is of the following from where A and B are constants:
   (a)$Ae^{-B|f|}$ (b)e^{-Bf}(c)$A + B|f|^2$ (d)Ae^{-Bf^2}

3. A signal x(t) has a Fourier transform X(ω). If x(t) is a real and odd function of t, them X(ω) is
   (a) a real and even function of ω
   (b) an imaginary and odd function of ω
   (c) an imaginary and even function of ω
   (d) a real and odd function of ω

4. The Fourier transform of a function x(t) is X(f). The Fourier transform of $dx(t)/dt$ will be
   (a)$dx(f)\,dt$ (b)$j2\pi f X(f)$
   (c)$jf(f)$ (d)$X(f)\,jf$

5. Let $(t) \leftrightarrow (j\omega)$ be Fourier Transform pair. The Fourier Transform of the signal $x(5t-3)$ in terms of $X(j\omega)$ is given as .....

6. If Fourier transform of function x(t) is X(w) =u(w+1)+u(w-1) then x(t) is
   (a) cos w (b) sin w(c) cos w/π (d) sin w/π

7. Fourier transform of sgn(t) is.....

8. Duality properties is.....

9. The unit step response of a system is $(1 - e^{-at})\,u(t)$. Then its impulse response is
   (a) e^{-at} u(t) (b)ae^{-at} u(t)
   (c)$\frac{1}{a} e^{-at} u(t)$ (d) - ae^{-at} u(t)

10. Fourier transform of $e^{-a|t|}$ is
    (a) $\frac{a}{a^2+\omega^2}$ (b) $\frac{2a}{a^2+\omega^2}$
    (b) (c) $\frac{\omega}{a^2+\omega^2}$ (d) $\frac{2\omega}{a^2+\omega^2}$

11. The Fourier transform of a continuous-time signal x(t) is given byX(w)=1/(10+jw)^2,$-\infty<w<\infty$, w denotes frequency. Then the value of | ln x(t)|| at t=1 is _____

12. The value of $\int_{-\infty}^{+\infty} e^{-t}\delta(2t-2)\,dt$
    (a) 1/2e (b) 1/e (c) 1/e^2 (d) 1/2e

13. Consider an LTI system with impulse response h(t)=e^{-5t}u(t) . if the output of the system is y(t) =e^{-3t} u(t)-e^{-5t} u(t) then the input x(t) is given by
    (A) $e^{-3t}u(t)$ (B) $2e^{-3t}u(t)$ (C) $e^{-5t}u(t)$ (D) $2e^{-5t}u(t)$

14..The impulse response of a continuous time system is given by h(t)=δ(t-1)+δ(t-3) .The value pf the step response at t=2 is
    (a) 0 (b) 1 (c) 2 (d) 3

15.Fourier transform of a dc signal with unity strengt is (a) 0 (b) 1 (c) 2πδ(w) (d) 2π

16. The function sinc x is equal to.....

17. The Discrete Fourier transform of unit step function.....

18. The Fourier transform F{ e^{-t} u(t) } is equal to $\frac{1}{1+j2\pi f}$ therefor F{ $\frac{1}{1+2\pi t}$} is
    (a) e^{f} u(f) (b) e^{-f} u(f) (c) e^{f} u(-f) (d) e^{-f} u(-f)

19. Fourier transform are define for a-periodic signal/Periodic signal.

20. The Fourier transform of coswt is given by

SWAMI KESHVANAND INSTITUTE OF TECHNOLOGY, MANAGEMENT & GRAMOTHAN

DEPARTMENT OF ELECTRONICS AND COMMUNICATION ENGINEERING
UNIT TEST (SET A), FM

Name of Faculty- Ravi Jangir **Class- V sem, Sec A**

1) Calculate the dissipation in power across 20Ω resistor for the FM signal v(t)= 20 cos(6600t+ 10sin2100t)

a. 5Wb. 20Wc. 10Wd. 400W

2) FM signal is better than AM signal because FM signal is better than AM signal because

a. Less immune to noiseb. Less adjacent channel interference
c. Amplitude limiters are used to avoid amplitude variationsd. All of the above

3) A 100MHz carrier is frequency modulated by 10 KHz wave. For a frequency deviation of 50 KHz, calculate the modulation index of the FM signal.

a. 100b. 50c. 70d. 90

4) For a FM signal v(t) = 25 cos (15 * 10^8t + 10 sin 1550t), calculate
Modulation index
Maximum frequency deviation

a. 10, 3000.1Hzb. 20, 1550.9Hzc. 10, 2465.9Hzd. 10, 2000.0Hz

5) FM is disadvantageous over AM signal because

a. much wider channel bandwidth is required
b. FM systems are more complex and costlier
c. Adjacent channel interference is more
d. Both a and b

6) Determine the Bandwidth of a FM wave when the maximum deviation allowed is 75KHz and the modulating signal has a frequency of 10KHz.

a. 170 KHzb. 200 KHzc. 100 KHzd. 1000 KHz

7) Wide band FM has the characteristics:
a. The frequency sensitivity k_f is largeb. Bandwidth is wide
c. Both a and b0d. None of the above
8) Narrow band FM has the characteristics:

a. The frequency sensitivity k_f is smallb. Bandwidth is narrow
c. Both a and bd. None of the above

9) A 100MHz carrier is frequency modulated by 5 KHz wave. For a frequency deviation of 100 KHz, calculate the carrier swing of the FM signal.

a. 2000 KHzb. 100 KHzc. 105 KHzd. 200 KHz

10) For a FM signal $v(t) = 15 \cos (10 * 10^8 t + 10 \sin 1220t)$, calculate

1. Carrier frequency
2. Modulating frequency

a. 159.1MHz, 194.1Hz**b.** 185.5MHz, 200.15Hz
c. 350.1MHz, 200.1Hz**d.** 159.1Hz, 194.1Hz

11) Guard bands are provided in FM signal to

a. Prevent interference from adjacent channels
b. To increase the noise**c.** To increase bandwidth**d.** None of the above

12) Maximum frequency deviation and the maximum bandwidth allowed for commercial FM broadcast is

a. 80KHz, 160Khz**b.** 75KHz, 200Khz**c.** 60KHz, 170Khz**d.** 75KHz, 250Khz

13) In frequency modulation,

a. Armstrong method is used for generation**b.** Multiple side bands are generated
c. The FM signal has infinite bandwidth**d.** All of the above

14) After passing the FM signal through mixer, what is the change in the frequency deviation Δ when the modulating frequency is doubled?

a. Becomes 2 Δ**b.** Becomes Δ /2**c.** Becomes Δ^2**d.** Remains unchanged

15) Calculate the modulation index in an FM signal when f_m (modulating frequency) is 250Hz and Δf (frequency deviation) is 5KHz.

a. 20**b.** 35**c.** 50**d.** 75

16) What is the value of carrier frequency in the following equation for the FM signal? $v(t)= 5 \cos(6600t+ 12\sin 2500t)$
a. 1150 Hz**b.** 6600 Hz**c.** 2500 Hz**d.** 1050 Hz

17) The equation $v(t) = A \cos [\omega_c t + k_p \Phi(t)]$ represents the signal as

a. Phase modulated signal
b. SSBSC signal
c. DSB SC signal
d. None of the above

18) Carson's rule is used to calculate

a. Bandwidth of FM signal**b.** Signal to noise ratio
c. Modulation index**d.** Noise figure

19) The increase or decrease in the frequency around the carrier frequency is termed as

a. Figure factor**b.** Frequency deviation
c. Modulation index**d.** Frequency spectrum

20) Phase-locked loop can be used as

a. FM demodulator**b.** AM demodulator**c.** FM receiver**d.** AM receiver

				GATE Qualified Students 2017-18		
Sr. No.	Student Name	Branch	Category	GATE Registration Number	Qualify Gate (Yes	Marks Obtained
1	YASH GARG	ECE	GENERAL	EC18S53041070	YES	38
2	RAHUL VERMA	ECE	GENERAL	EC18S53045173	YES	20.33
3	Chhavi Verma	ECE	GENERAL	EC18S53042332	YES	29.67

SKIT JAIPUR (Odd semester 2017-18)

ELectronics and Communication Department

skit

III EC-A

	1	2	3	4	5	6	7	8
Mo	3EC4:CA L-203 SRO / RZ	3EC11: BE ECL-01 VA 3EC10: DE Lab ECL-07 VP		L	3EC2:DSA L-102 LKL	3EC5: EPM L-101 RJ	SoS APS	
Tu	3EC3: DE L-101 VP	3EC6:AEM L-101 SG	3EC6:AEM L-101 SG	U	3EC8:CP Lab ECL-01 LKL 3EC11: BE ECL-10 RK		3EC3: DE L-104 VP	
We	3EC1: EDC L-203 RP	3EC1: EDC L-203 RP	3EC4:CA L-203 SRO / RZ	N	3EC10: DE Lab ECL-07 VP 3EC9:AE Lab ECL-03 RP		3EC4:CA L-101 SRO / RZ	
Th	3EC4:CA L-203 SRO / RZ	3EC4:CA L-203 SRO / RZ	3EC2:DSA L-101 LKL	C	3EC7:EW RJ 3EC8:CP Lab ECL-01 LKL		SoS SoS Lab APS	
Fr	3EC3: DE L-101 VP	3EC3: DE L-101 VP	3EC5: EPM L-103 RJ	H	3EC9:AE Lab ECL-03 RP 3EC7:EW ECL-07 RJ			
Sa	3EC1: EDC L-101 RP	3EC1: EDC L-101 RP	3EC2:DSA L-102 LKL	Break	Library	3EC6:AEM L-102 SG	3EC6:AEM L-101 SG	

Timetable generated: 9/19/2018

aSc Timetables

Teachers:

APS - Anupriya Sharma
LKL - Lalit Kumar Lata
RJ - Ravi Jangir
RK - Ramesh Kumar
RP - Rahul Pandey
RZ - Rukhsar Zafar
SG - Sangeeta Gupta
SRO - Shish ram Ola
VA - Vinita Agrawal
VP - Vikas Pathak

Subjects:

3EC10: DE Lab - Digital Electronocs Lab
3EC11: BE - Bussiness Enterprenureship
3EC1: EDC - Electronic Devices and Circuits
3EC2:DSA - Data Structures and Algorithms
3EC3: DE - Digital Electronics
3EC4:CA - Circuit Analysis and Synthesis
3EC5: EPM - Electromag. Prop. of Materials
3EC6:AEM - Advanced Engg. Mathematics
3EC7:EW - Electronics Workshop
3EC8:CP Lab - Computer Programming Lab
3EC9:AE Lab - Analog Electronics Lab

Break - Break
C - C
H - H
L - L
Library - Library
N - N
Prob/Test - Problem/Test
SoS - Soft Skill
U - U
WDActivity - Wednes Day Activity

SKIT JAIPUR (Odd semester 2017-18)

ELectronics and Communication Department

skit

V EC-A

	1	2	3	4	5	6	7	8
Mo	5EC11 PEDM (Group 1) ECL-02 SA 5EC8: ME Lab (Group 2) ECL-10 HN		5EC6: ADS L-104 MC	L	CRT L-104		5EC5: MW L-104 HN	
Tu	5EC1:SS L-104 SL	5EC1:SS L-104 SL	5EC2: LIC L-104 RP	U	5EC7:LIC Design Lab (Group 1) ECL-12 RP 5EC9: Comm Lab (Group 2) ECL-15 RJ		5EC4: AC RJ	
We	5EC3:TE L-104 LKL	5EC4: AC L-104 RJ	5EC4: AC L-104 RJ	N	CRT L-104		5EC6: ADS L-104 MC	
Th	5EC10: SS Lab (Group 1) ECL-17 SL 5EC7:LIC Design Lab (Group 2) ECL-12 RP		5EC2: LIC L-104 RP	C	5EC8: ME Lab (Group 1) ECL-10 HN 5EC11 PEDM (Group 2) L-104 SA		5EC5: MW L-104 HN	
Fr	5EC3:TE L-104 LKL	5EC1:SS L-104 SL	5EC1:SS L-104 SL	H	CRT L-104		5EC5: MW L-104 HN	
Sa	5EC3:TE L-104 LKL	5EC4: AC L-104 RJ	5EC6: ADS L-104 MC	Break	5EC9: Comm Lab (Group 1) ECL-15 RJ 5EC10: SS Lab (Group 2) ECL-17 SL		5EC2: LIC L-104 RP	

Timetable generated: 9/19/2018

aSc Timetables

Teachers:

HN - Harshal Nigam
LKL - Lalit Kumar Lata
MC - Manju Choudhary
RJ - Ravi Jangir
RP - Rahul Pandey
SA - Swati Arora
SL - Sunil Lakhawat

Subjects:

5EC10: SS Lab - Signal System Lab
5EC11 PEDM - Professional Ethics and Diagaster Management
5EC1:SS - Signal and Signals
5EC2: LIC - Linear Integrated Circuit
5EC3:TE - Telecommunication Engineering
5EC4: AC - Analog Communication
5EC5: MW - Microwave Engineering - I
5EC6: ADS - Advanced Data Structures
5EC7:LIC Design Lab - Linear Integrated Circuit Design Lab
5EC8: ME Lab - Microwave Engineering Lab
5EC9: Comm Lab - Communication Lab

Break - Break
C - C
CRT - CRT
H - H
L - L
Library - Library
N - N
Prob/Test - Problem/Test
U - U
WDActivity - Wednes Day Activity

Swami Keshvanand Institute of Technology, Management and Gramothan

skit

IV EC-A (I-Shift)

	08:00 - 09:00 (1)	09:00 - 10:00 (2)	10:00 - 11:00 (3)	11:00 - 11:30 (4)	11:30 - 12:30 (5)	12:30 - 01:30 (6)	01:30 - 02:30 (7)	02:30 - 03:30 (8)
Monday	OT 101 CPJ	AE 102 RP	AE 102 RP		T-202 RVSP Group 1 RZ 204 OT Group 2 CPJ	Library Group 1 101 EMFT Group 2 PAL	HSS S.Hall SAG-E	
Tuesday	AE 101 RP	AEM-II 101 SG-M	101 AEM-II Group 1 SG-M 104 RVSP Group 2 RZ		Library	T-202 OT Group 1 CPJ 205 AEM-II Group 2 SG-M	HSS S.Hall SAG-E	
Wednesday	EMFT 102 PAL	EMFT 102 PAL	RVSP 102 RZ		ECL-11 AE Lab Group 1 RP ECL-09 M&I Lab Group 2 LKL		WDA	
Thursday	EMFT 103 PAL	ECL-17 CP lab-II Group 1 LKL ECL-11 AE Lab Group 2 RP			AEM-II 205 SG-M	EMI 102 LKL	EMI 102 LKL	
Friday	OT 101 CPJ	RVSP 101 RZ	T-202 EMFT Group 1 PAL Library Group 2		AEM-II 101 SG-M	AE 101 RP	EMI LKL	
Saturday	OT 101 CPJ	RVSP 101 RZ	EMI 101 LKL		EMFT 101 PAL	ECL-09 M&I Lab Group 1 LKL ECL-17 CP lab-II Group 2 MC		

Timetable generated: 12/23/2017

aSc Timetables

Teachers:

CPJ - C. P. Jain
LKL - LALIT KUMAR LATA
MC - MANJU CHOUDHARY
PAL - PALLAV RAWAL
RP - RAHUL PANDEY
RZ - Dr. RUKHSAR ZAFAR
SAG-E - Dr. Shikha Agrawal (English)
SG-M - Dr. Sangeeta Gupta

Subjects:

AE Lab - Analog Electronics Lab
AE - Analog Electronics
AEM-II - Advanced Engineering Maths-II
CP lab-II - Computer Programming lab-II
EMFT - Electro magnetic Wave & Propagation
EMI - Electronics Measurement & Instumentation
HSS - Humanities & social Sciences
Library - Library
M&I Lab - Measurement & Instrumentation Lab
OT - Optimization Techniques
RVSP - Random variables & Stochatic processes
WDA - Wednes Day Activity

Swami Keshvanand Institute of Technology, Management and Gramothan

skit

VI EC-A (I-Shift)

	08:00 - 09:00 (1)	09:00 - 10:00 (2)	10:00 - 11:00 (3)	11:00 - 11:30 (4)	11:30 - 12:30 (5)	12:30 - 01:30 (6)	01:30 - 02:30 (7)	02:30 - 03:30 (8)
Monday	DC 201 RJ	DC 201 RJ	OFC 201 AA		CS 102 AJ	PD&GA 201PKJ / SH-E	IE 102 HN	
Tuesday	ECL-15 Comm Lab-II Group 1 GJ ECL 01 RFS Lab Group 2 PAL				OFC 201 AA	MW-II 101 PAL	MP 101 RP	
Wednesday	DC 201 RJ	ECL-12 IE Lab Group 1 HN ECL-07 MP Lab Group 2 RP			OFC 201 AA	201 MW-II Group 1 PAL T-202 DC Group 2 RJ	WDA	
Thursday	CS 101 AJ	CS 101 AJ	IE 101 HN		MW-II 202 PAL	PD&GA 202PKJ / SH-E	101 DC Group 1 RJ 202 MW-II Group 2 PAL	
Friday	MP 102 RP	MP 102 RP	DC 102 RJ		ECL 01 RFS Lab Group 1 PAL ECL-15 Comm Lab-II Group 2 RJ			
Saturday	MW-II 201 PAL	MP 201 RP	IE 201 HN		CS 203 AJ	ECL-07 MP Lab Group 1 RP ECL-12 IE Lab Group 2 HN		

Timetable generated: 12/23/2017

aSc Timetables

Teachers:

AA - ANKIT AGRAWAL
AJ - ABHINANDAN JAIN
GJ - GLORIA JOSEPH
HN - HARSHAL NIGAM
PAL - PALLAV RAWAL
PKJ - Dr. PRAVEEN KUMAR JAIN
RJ - RAVI JANGIR
RP - RAHUL PANDEY
SH-E - Shiba Anjum-English

Subjects:

CS - Control System
Comm Lab-II - Communication LAb-II
DC - Digital Communications
IE Lab - Industrial Electronics Lab
IE - Industrial Electronics
Library - Library
MP Lab - Micro Processor Lab
MP - Micro Processor
MW-II - Micro Wave Engg.-II
OFC - Optical Fiber Communication
PD&GA - Personality Development & Graduate Aptitude
RFS Lab - RF Simulation Lab
WDA - Wednes Day Activity

Report of GATE classes

Dated: 19/02/18

GATE classes are running for IVth and VIth semester. The subjects which are in GATE syllabus are given an extra one hour per week so that more emphasis can be put on basic concepts and numerical solving. Following are the subject which are given an extra hour per week
AE (4EC1) EMFT(4EC4) Microprocessor (6EC 2), Digital Communication(6EC4), Control System (6 EC5).
Practice set of questions (from previous year GATE paper) are discussed in class in these subjects, to have better command on concepts.Shown in **Annexure1 &2.**

A test series is also planned which will be taken as per the schedule given below.

Test no.	Subjects	UNIT	Date
Test 1	Analog electronics + EMFT	Unit 1	26/2/18 to 28/2/18
Test 2	Microprocessor + Control system	Unit 1&2	6/3/18 to 10/3/18
Test 3	Digital communication	Unit 1&2	13/3/18 to 16/3/18
Test 4	Microprocessor + Control system+DC	Unit 1 to 4	27/3/18 to 30/3/18
Test 5	Analog electronics + EMFT	Unit 1 to 4	2/4/18 to 4/4/18

Rahul
Rahul Pandey
Assistant Professor

S. K. Bhatnagar
20/2/18

Annexure 1

GATE QUESTION

Microprocessor

1. An assembly language program is given below:

```
Line 1:   MVI A, B5H
          MVI B, 0EH
          XRI 69H
          ADD B
          ANI 9BH
          CPI 9FH
          STA 3010H
          HLT
```

(a) Find content of the accumulator just after execution of the ADD instruction in line 4.

(b) Find the status of the CY and Z flags, after the execution of line 7.

2. Consider the following 8085 instruction

```
MVI A, A9H
MVI B, 57H
ADD B
ORA A
HLT
```

Find the contents of accumulator and flag register after the instruction ORA A is executed.

3. In given fig.1, identify the memory address range of ROM1, ROM2 and R/WM1.

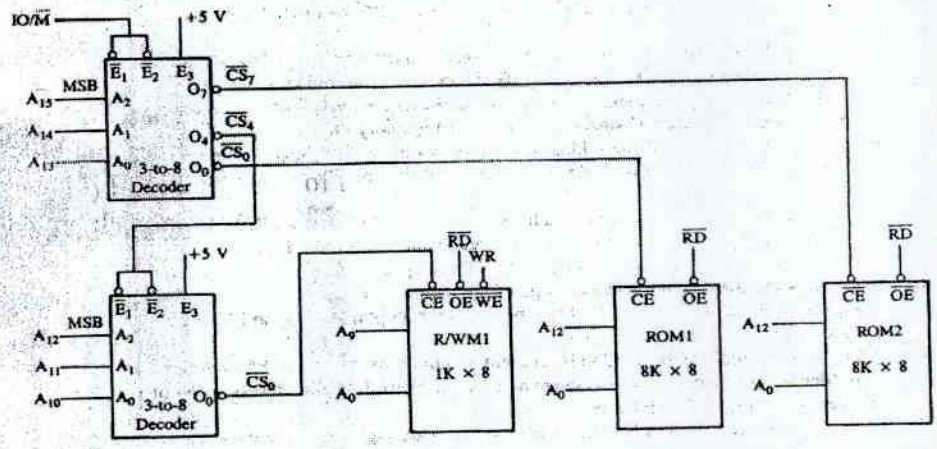

(i). Analyze the program and find the contents of register 'A' after execution.

```
MVI A, 07H
RLC
MOV B, A
RLC
```

RLC
RLC
ORA B
HLT

4. Microprocessor 8085 are Interfaced by two chips of 4K RAM and one chip of 2K ROM (Fig.1), Find the memory address ranges of the memory chips.

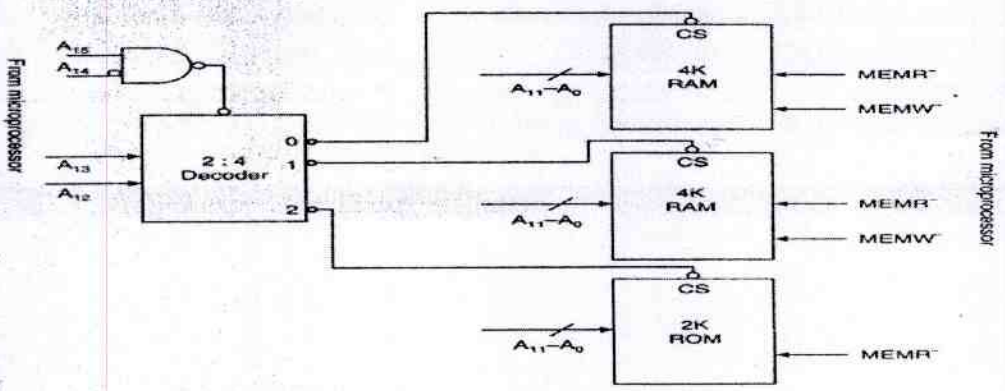

5. What will be the value in accumulator, for the given 8085 program below?

MVI C, 7FH
MVI B, 3EH
MOV A, B
RLC
RLC
ANI 7FH
HLT

6. Find the content of the accumulator after the execution of the program.

3000 MVI A, 45H
3002 MOV B, A
3003 STC
3004 CMC
3005 RAR
3006 XRA R
3007 HLT

7. The contents of the accumulator of 8085 microprocessor after execution of the following Instruction will be

MVI A, A7H

ORA A
RLC
(a) FFH (b) 4FH (c) 3F H (d) CE H

8. There are four chips each of 1024 bytes connected to a 16 bit address bus as shown in the figure below, find the RAMs 1, 2, 3 and 4 mapped address respectively

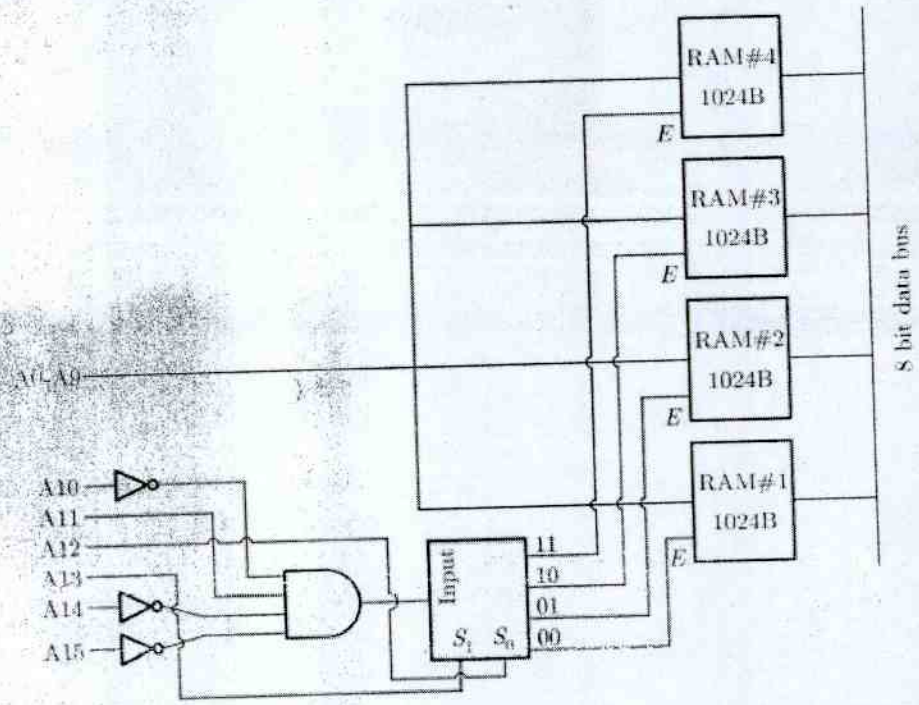

9. The following sequence of instructions are executed by an 8085 microprocessor:

1000 LXI SP, 27 FF
1003 CALL 1006
1006 POP H

The contents of the stack pointer (SP) and the HL, register pair on completion of execution of these instruction are (A) SP = 27 FF, HL = 1003 (B) SP = 27 FD, HL = 1003 (C) SP = 27 FF, HL = 1006 (D) SP = 27 FD, HL = 1006

10. Specify the contents of the registers and the flag status as the following Instructions are executed.

MVI A, 00H
MVI B, F8H
MOV C, A
MOV D, B
ADD B
HLT

Annexure - 2

GATE QUESTION

CONTROL SYSTEM

1.

The signal flow graph for a system is given below. The transfer function $\frac{Y(s)}{U(s)}$ for this system is

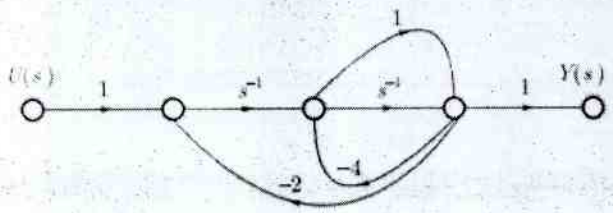

(A) $\frac{s+1}{5s^2+6s+2}$

(B) $\frac{s+1}{s^2+6s+2}$

(C) $\frac{s+1}{s^2+4s+2}$

(D) $\frac{1}{5s^2+6s+2}$

2.

The transfer function $Y(s)/R(s)$ of the system shown is

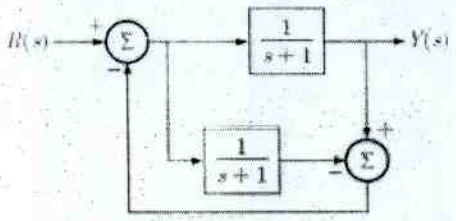

(A) 0

(B) $\frac{1}{s+1}$

(C) $\frac{2}{s+1}$

(D) $\frac{2}{s+3}$

3.

The magnitude of frequency responses of an underdamped second order system is 5 at 0 rad/sec and peaks to $\frac{10}{\sqrt{3}}$ at $5\sqrt{2}$ rad/sec. The transfer function of the system is

(A) $\frac{500}{s^2+10s+100}$

(B) $\frac{375}{s^2+5s+75}$

(C) $\frac{720}{s^2+12s+144}$

(D) $\frac{1125}{s^2+25s+225}$

4.

Consider the signal flow graph shown in Fig. The gain $\frac{X_5}{X_1}$ is

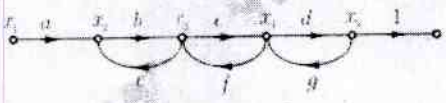

(A) $\frac{1-(be+cf+dg)}{abcd}$

(B) $\frac{bedg}{1-(be+cf+dg)}$

(C) $\frac{abcd}{1-(be+cf+dg)+bedg}$

(D) $\frac{1-(be+cf+dg)+bedg}{abcd}$

5.

The number of open right half plane of

$$G(s)=\frac{10}{s^5+2s^4+3s^3+6s^2+5s+3} \text{ is}$$

(A) 0

(B) 1

(C) 2

(D) 3

6.

The open-loop transfer function of a unity feedback system is

$$G(s)=\frac{K}{s(s^2+s+2)(s+3)}$$

The range of K for which the system is stable is

(A) $\frac{21}{4}>K>0$

(B) $13>K>0$

(C) $\frac{21}{4}<K<\infty$

(D) $-6<K<\infty$

7.

For the polynomial $P(s)=s^2+s^4+2s^3+2s^2+3s+15$ the number of roots which lie in the right half of the $s-$plane is

(A) 4

(B) 2

(C) 3

(D) 1

8.

The signal flow graph of a system is shown in Fig. below. The transfer function $C(s)/R(s)$ of the system is

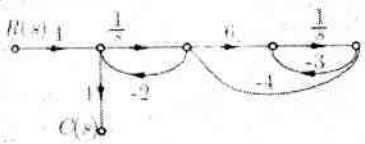

Swami Keshvanand Institute of Technology, Management &Gramothan,

Ramnagaria, Jagatpura, Jaipur-302017

Submitted By :.....ABHILASHA YADAV ECE VI SEM CONTROL SYSTEM

1. A linear, time-invariant, causal continuous time system has a rational transfer function with simple poles at s = -2 and s = -4, and one simple zero at s = -1. A unit step u(t) is applied at the input of the system. At steady state, the output has constant value of 1.The impulse response of this system is

(a)$[exp(-2t) + \exp(-4t)]\ u(t)$

(b)$[-4\exp(-2t) + 12\exp(-4t) - \exp(-t)]u(t)$

(c)$[-4\exp(-2t) + 12\exp(-4t)]u(t)$

(d)$[-0.5\exp(-2t) + 1.5\exp(-4t)]u(t)$ **[GATE 2008: 2 Marks]**

2. The unit impulse response of a system is $h(t) = e - t\ ,t \geq 0$ For this system, the steady-state value of the output for unit step input is equal to

(a) 1 (b)0 (c) 1 (d) ∞ **[GATE 2006: 2 Marks]**

3. The signal flow graph for a system is given below. The transfer function $Y(s)\ /U(s)\ for\ this\ system\ is$

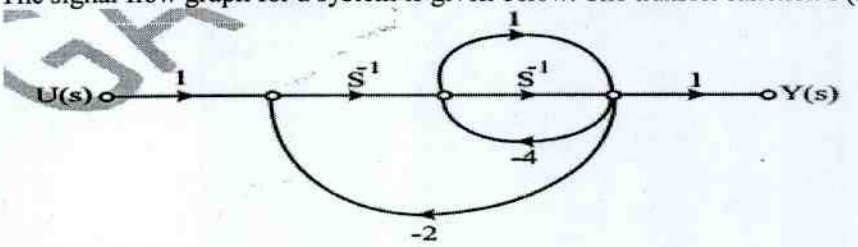

(a) $\frac{s+1}{5s^2+6s+2}$

(b) $\frac{s+1}{s^2+6s+2}$

(c) $\frac{s+1}{s^2+4s+2}$

(d) $\frac{1}{5s^2+6s+2}$

[GATE 2006: 2 Marks]

4. The unity feedback system shown in figure has:

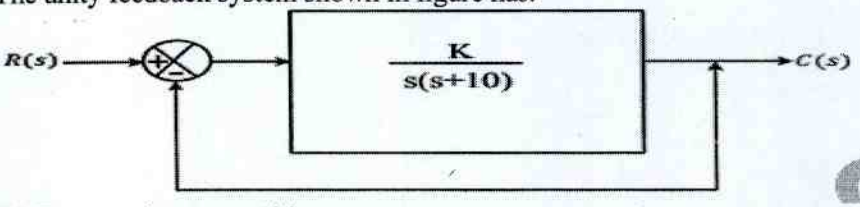

(a) Zero steady state position error
(b)Zero steady state velocity error
(c) Steady state position error K/10 units
(d)Steady state velocity error K/10 units

5. The steady state error of a stable 'type 0' unity feedback system for a unit step function is

(a) 0 (b) $1/1+KP$ (c) ∞ (d) $1/KP$ **[GATE 2015 : 2 Marks]**

6. A unity-feedback control system has the open-loop transfer function

$G(s) = 4(1+2s)/(S^2(S+2))$ if the input to the system is a unity ramp, the steady-state error will be

(a) 0 (b)0.5 (c) 2 (d)Infinity **[GATE 201 1: 2 Marks]**

7. Consider the following signal flow diagram in the figure

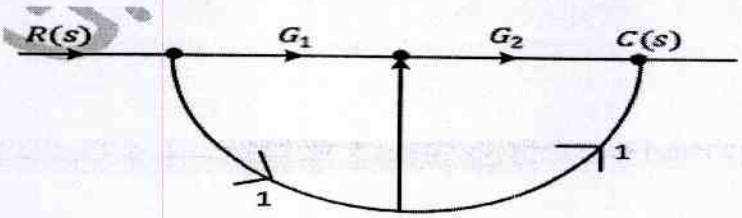

the transfer function $C(S)/R(S)$ is

(a) $G1G2/(1+G1G2)$ (b)$G1G2 + G1 + 1$

(c) $G1G2 + G2 + 1$ (d) $G1/(1+G1G2)$

8. The open-loop DC gain of a unity negative feedback system with closed loop transfer Function

$S+4/(S^2+7S+13)$ is

(a) 4/13 (b)4/ 9 (c) 4 (d)13 **[GATE 2001: 2 Marks]**

9. In the system shown below, $x(t) = (\sin t)u(t)$. In steady-state, the response $y(t)$ will be

(a) $1/\sqrt{2}\, sin\,(t - \pi/4)$

(b) $1/\sqrt{2}\, sin\,(t + \pi\, 4)$

(c) $1\ \sqrt{2}\, e^{-t} \sin t$

(d) $\sin t - \cos t$ **[GATE 2006: 1 Mark]**

10. 6. A system described by the following differential equation

$d^2y/dt^2 + 3\, dy/dt + 2y = x(t)$ is initially at rest. For input $x(t) = 2u(t)$, the output y(t) is

(a) $(1 - 2e^{-t} + e^{-2t})u(t)$

(b) $(1 + 2e^{-t} - 2e^{-2t})u(t)$

(c) $(0.5 + e^{-t} + 1.5e^{-2t})u(t)$

(d) $(0.5 + 2e^{-t} + 2e^{-2t})u(t)$

(A) $\frac{6}{s^2 + 29s + 6}$

(B) $\frac{6s}{s^2 + 29s + 6}$

(C) $\frac{s(s+2)}{s^2 + 29s + 6}$

(D) $\frac{s(s+27)}{s^2 + 29s + 6}$

9.

The transfer function of a system is $G(s) = \frac{100}{(s+1)(s+100)}$. For a unit - step input to the system the approximate settling time for 2% criterion is

(A) 100 sec

(B) 4 sec

(C) 1 sec

(D) 0.01 sec

10.

A system described by the transfer function $H(s) = \frac{1}{s^3 + \alpha s^2 + ks + 3}$ is stable. The constraints on α and k are.

(A) $\alpha > 0, \alpha k < 3$

(B) $\alpha > 0, \alpha k > 3$

(C) $\alpha < 0, \alpha k > 3$

(D) $\alpha > 0, \alpha k < 3$

Report of GATE classes

Dated: 19/02/18

GATE classes are running for IVth and VIth semester. The subjects which are in GATE syllabus are given an extra one hour per week so that more emphasis can be put on basic concepts and numerical solving. Following are the subject which are given an extra hour per week
AE (4EC1) EMFT(4EC4) Microprocessor (6EC 2), Digital Communication(6EC4), Control System (6 EC5).
Practice set of questions (from previous year GATE paper) are discussed in class in these subjects, to have better command on concepts.Shown in **Annexure1 &2.**

A test series is also planned which will be taken as per the schedule given below.

Test no.	Subjects	UNIT	Date
Test 1	Analog electronics + EMFT	Unit 1	26/2/18 to 28/2/18
Test 2	Microprocessor + Control system	Unit 1&2	6/3/18 to 10/3/18
Test 3	Digital communication	Unit 1&2	13/3/18 to 16/3/18
Test 4	Microprocessor + Control system+DC	Unit 1 to 4	27/3/18 to 30/3/18
Test 5	Analog electronics + EMFT	Unit 1 to 4	2/4/18 to 4/4/18

Rahul Pandey
Assistant Professor

Report of GATE classes

Dated: 29/9/17

GATE classes are running according to planned schedule.
In this week a unit test on topic 'k map and number system' is conducted in subject Digital Electronics (3EC4) for IIIrd semester students. Test paper and result analysis is shown in **Annexure 1**.For Vth semester students Unit tests were conducted in subject LIC (5EC2) on 26/9/17 and signal &system (5EC1) on 29/9/17.Test paper were designed to check basic concepts of the topic, previous year GATE questions are also asked in the test paper. Test papers are shown in **Annexure 2&3.**

A practice set of previous year GATE questions on topic **Frequency Modulation** in subject **Analog Communication** is discussed and solved in class for 5th semester students .The practice set is shown in **Annexure 4**.

Forward. to
1. Director (Acad.)
2. Registrar.

Rahul
Rahul Pandey
Assistant Professor

Mukesh
29.9.17

ANNEXURE-1

skitclasstests.skit.ac.in/admin/question/ques_bank/FLsUvFjcEo7pP3ZrXD0Tq92LX9Lt6AUv7~XzyWWEb9jMWzKEVu7o4Z4TwttNatNndC3tgABQwbaYQV4c3ag--

DE Unit Test-I

Add new question

Question Bank

Show 25 entries

Search:

S.No.	Question	Right Answer	Option 1	Option 2	Option 3	Actions
1	In the negative logic system,	The more negative of the two logic levels represents a logic '1' state.	The more negative of the two logic levels represents a logic '0' state.	All input and output voltage levels are negative.	The output is always complement of the intended logic function	Edit | Delete
2	The number of digit 1 present in the binary representation of is	9	8	10	12	Edit | Delete
3	F's complement of (2BFD)hex is	D402	E304	D403	C403	Edit | Delete
4	Karnaught (K) map is used to	minimize the number of gates only a digital circuit	minimize the number of flip-flop in a digital circuit.	minimize the number of gates and fan-in of a digital circuit	design gates	Edit | Delete
5	The minimum decimal equivalent of the number 11 C.0 is	254	183	194	268	Edit | Delete
6	A set of Boolean connective is functionally complete if all Boolean functions can be synthesized using those. Which of the following sets of connectives is NOT functionally complete?	implication, negation	EX-NOR	OR, negation	NAND	Edit | Delete

10:21 AM

SKIT Class Tests

skitclasstests.skit.ac.in/admin/question/ques_bank/FLsUvFjcEo7pP32rXD0Tg92LX9Lt6AUv7~XryjWWEb9jlvhVsK6Vu7oAZXTwttNatNndC31gABQwbaYQV4c3ag--

7	The addition of 4-bit, two's complement, binary numbers 1101 and 0100 results in	0001 and an overflow	1001 and no overflow	0001 and no overflow	1001 and an overflow	Edit | Delete
8	Using a 4-bit 2's complement arithmetic, which of the following additions will result in an overflow? (i) 1100 + 1100 (ii) 0011 + 0111 (iii) 1111 + 0111	(i) and (iii) only	(i) only	(ii) only	(iii) only	Edit | Delete
9	What is the minimum number of NAND gates required to implement a-2-input EXCLUSIVE-OR function without using any other logic gate?	4	3	5	6	Edit | Delete
10	P is a 16-bit integer. The 2's complement representation of P is (F87B)16.The 2's complement representation of 8*P is	(C3D8)16	(187B)16	(F878)16	987B)16	Edit | Delete
11	In 2`s complement addition, overflow	cannot occur when a positive value is added to a negative value	is flagged whenever there is carry from sign bit addition	is flagged when the carries from sign bit and previous bit match	None of the above	Edit | Delete
12	The 2`s complement representation of the decimal value -15 is	10001	1111	11111	111111	Edit | Delete
13	The decimal value 0.25	is equivalent to the binary value 0.01	is equivalent to the binary value 0.1	is equivalent to the binary value 0.00111...	cannot be represented precisely in binary	Edit | Delete
14	The 2`s complement representation of (-539)10 in hexadecimal is	DE5	ABE	DBC	9E7	Edit | Delete
15	The number 43 in 2`s complement representation is	00101011	11010101	010110101	10101011	Edit | Delete

10:24 AM

SKIT Class Tests

skitclasstests.skit.ac.in/admin/question/ques_bank/FLsUvFjcEo7pP32rXD0Tg92LX9Lt6AUv7~XzyiWWEb9jlvhVsK6Vu7oAZXTwttNatNndC3LgABQwbaYQV4c3ag--

16	(1217)8 is equivalent to	(028F)16	(1217)16	(2297)10	(0B17)16	Edit | Delete
17	The octal equivalent of the HEX number AB.CD is	526.632	526.314	253.632	253.314	Edit | Delete
18	The output of a logic gate is "1" when all its inputs are at logic "0". The gate is either	A NOR or an EX-NOR gate	An AND or an EX-NOR gate	A NOR or an EX-OR gate	A NAND or an EX-OR gate	Edit | Delete
19	The two numbers represented in signed 2's complement form are P = 11101101 and Q = 11100110. If Q is subtracted from P, the value obtained in signed 2's complement form is	00000111	100000111	11111001	111111001	Edit | Delete
20	The Boolean function Y = AB + CD is to be realized using only 2 – input NAND gates. The minimum number of gates required is	3	2	4	5	Edit | Delete
21	Decimal 43 in Hexadecimal and BCD number system is respectively	2B, 0100 0011	B2, 0100 0011	2B, 0011 0100	B2, 0100 0100	Edit | Delete
22	11001, 1001 and 111001 correspond to the 2's complement representation of which one of the following sets of number?	-7, -7 and -7 respectively	25, 9 and 57 respectively	-6, -6 and -6 respectively	-25, -9 and -57 respectively	Edit | Delete
23	4-bit 2's complement representation of a decimal number is 1000. The number is	-8	+8	0	-7	Edit | Delete
24	The 2's complement representation of -17 is	01111	01110	11110	10001	Edit | Delete

10:25 AM

SWAMI KESHVANAND INSTITUTE OF TECHNOLOGY ,MANEGMENT AND GRAMOTHAN
RAMNAGARIA, JAGATPURA, JAIPUR - 302025

ELECTRONICS & COMM. ENGINEERING **II B.Tech. III SEM 2017**

Marks Award List of Class Tests Result analysis

SUB: Digital Electronics **MM. 20**

SR. NO.	EXAM ROLL NO.	STUDENT'S NAME	MARKS OBTAINED IN I M.M. 20	II M.M. 20	III M.M. 20	Total 60 (A)	Final Marks (A*10/31)
1		Hariom Sharma	7			7	2.26
2	16ESKEC002	Aamod Mathur	8			8	2.58
3	16ESKEC003	Abhinav Kanchhal	9			9	2.90
4	16ESKEC004	Abhishek Gupta	7			7	2.26
5	16ESKEC009	Akshat Garg	A			0	0.00
6	16ESKEC010	Akshay Baid	A			0	0.00
7	16ESKEC016	Ansh Arora	A			0	0.00
8	16ESKEC017	Anshul Kothari	A			0	0.00
9	16ESKEC019	Arpit Dadheech	9			9	2.90
10	16ESKEC020	Aryan Agarwal	9			9	2.90
11	16ESKEC023	Ashvini Kumawat	12			12	3.87
12	16ESKEC026	Baibhav Kumar	7			7	2.26
13	16ESKEC027	Deepak Saini	A			0	0.00
14	16ESKEC031	Gopal Gupta	A			0	0.00
15	16ESKEC032	Himanshu Singh Shekhawat	8			8	2.58
16	16ESKEC033	Himanshu Singhal	9			9	2.90
17	16ESKEC034	Hitesh Bhojwani	A			0	0.00
18	16ESKEC039	Keshav Kishor Chhipa	A			0	0.00
19	16ESKEC040	Khushboo Sharma	10			10	3.23
20	16ESKEC041	Kirti Kumawat	12			12	3.87
21	16ESKEC044	Kundan Raj	6			6	1.94
22	16ESKEC045	Lakshita Hada	A			0	0.00
23	16ESKEC046	Lalit Kumar	7			7	2.26
24	16ESKEC047	Madhulika Jain	4			4	1.29
25	16ESKEC049	Mahima Choudhary	6			6	1.94
26	16ESKEC050	Mitanshu Gupta	4			4	1.29
27	16ESKEC051	Mohit Gupta	A			0	0.00
28	16ESKEC052	Monika Sharma	9			9	2.90
29	16ESKEC055	Nistha Agarwal	8			8	2.58
30	16ESKEC057	Pragya Sharma	9			9	2.90
31	16ESKEC059	Prakhar Golania	12			12	3.87
32	16ESKEC060	Pranjali Verma	9			9	2.90

HEAD

NAME OF FACULTY

SIGNATURE OF FACULTY

SWAMI KESHVANAND INSTITUTE OF TECHNOLOGY ,MANEGMENT AND GRAMOTHAN
RAMNAGARIA, JAGATPURA, JAIPUR - 302025

SUB: Digital Electronics **MM. 20**

SR. NO.	EXAM ROLL NO.	STUDENT'S NAME	MARKS OBTAINED IN			Total 60 (A)	Final Marks (A*10/31)
			I M.M. 20	II M.M. 20	III M.M. 20		
33	16ESKEC070	Ruchi Kumari	8			8	2.58
34	16ESKEC083	Shreya Agrawal	12			12	3.87
35	16ESKEC301	Sahil Khan	11			11	3.55
36	16ESKEC700	Abhishek Kumar	A			0	0.00
37	16ESKEC705	Amit Jain	12			12	3.87
38	16ESKEC708	Chetan Sharma	7			7	2.26
39	16ESKEC720	Manish Kumar Giri	5			5	1.61
40	16ESKEC721	Mayur Sharma	11			11	3.55
41	16ESKEC727	Pulkit Sharma	6			6	1.94
42	16ESKEC743	Vijay Sharma	9			9	2.90

HEAD

NAME OF FACULTY

SIGNATURE OF FACULTY

ECE Department

Report of GATE classes

Dated: 23/9/17

GATE classes are running according to planned schedule.
In this week a full syllabus Test of subject Digital Electronics (3EC4) is conducted at 21/09/17 at online portal of www.etestseries.in for Vth and VIIth semester students. Out of 77 registered students 64 were present in the test. Test was based on GATE exam pattern in which negative marking of 1/3 of the total marks of a question was there for wrongly attempted Question. Question paper of test and complete analysis of result was shown in **Annexure 1**.In which **20 students scored more than 60% marks.**

Rahul Pandey
Assistant Professor

S.K. Bhatnagar
23/9/17

ANNEXURE 1

GATE DIGITAL ELECTRONICS

Test paper

1. Figure given below shows the internal schematic of a TTL AND-OR-Invert (AOI) gate. For the inputs shown in the given figure, the output Y is

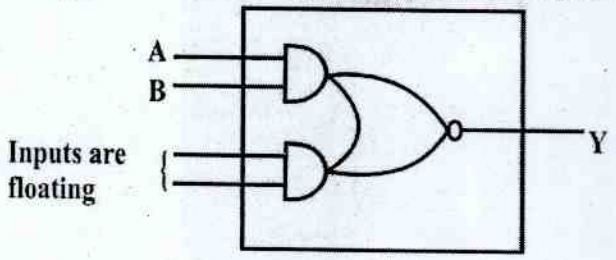

(A) 0 (B) 1 (C) AB (D) $\overline{AB}$

A

2. In the sequential circuit shown below, it the initial value of the output Q_1Q_0 is 00, what are the next four values of Q_1Q_0?

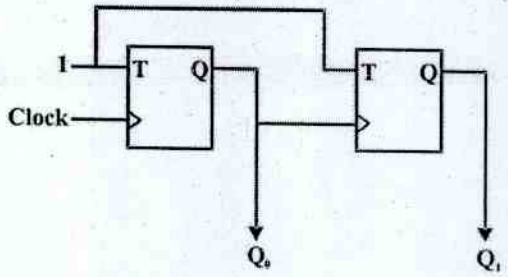

(a) 11, 10, 01, 00 (b) 10, 11, 01, 00 (c) 10, 00, 01, 11 (d) 11, 10, 00, 01

A

3. What is the final value stored in the linear feedback shift register if the input is 101101?

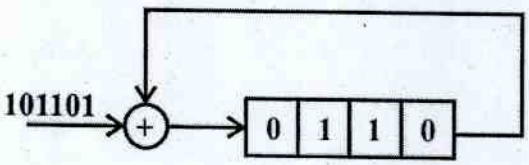

(a) **0110** (b) 1011 (c) 1101 (d) 111

A

4. The digital circuit shown in the figure works as a

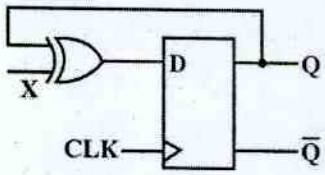

(A) JK flip-flop (B) Clocked RS flip-flop **(C) T flip-flop** (D) Ring Counter

C

5. If the input to the digital circuit of the above figure consisting of a cascade of 20 XOR gates is X, then what is the output Y?

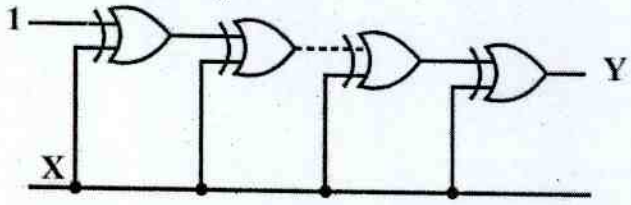

(A) 0 **(B) 1** (C) X' (D) X

B

6. A 4 × 1 MUX is used to implement a 3-input Boolean function is as shown above. The Boolean function F(A, B, C) implemented is:

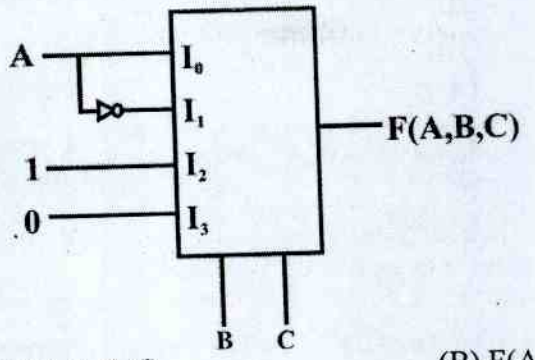

(A) F(A, B, C) = ∑ (1, 2, 4, 6) (B) F(A, B, C) = ∑ (1, 2, 6)

A

7. The Boolean function realized by the logic circuit shown is

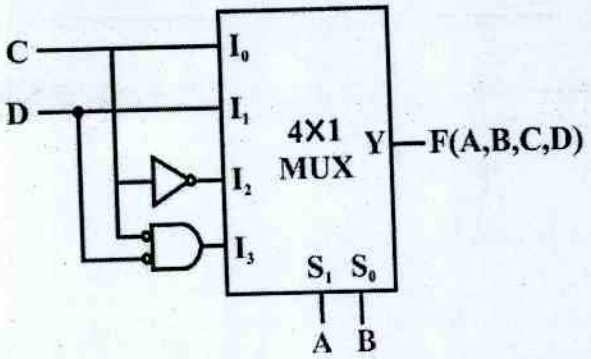

(A) F = ∑m(0, 1, 3, 5, 9, 10, 14) (B) F = ∑m(2, 3, 5, 7, 8, 12, 13)
(C) F = ∑m(1, 2, 4, 5, 11, 14, 15) **(D) F = ∑m(2, 3, 5, 7, 8, 9, 12)**

D

8. What are the minimum number of 2 – to – 1 multiplexers required to generate a 2-input AND gate and a 2-input Ex-OR gate?
(A) 1 and 2 (B) 1 and 3 **(C) 1 and 1** (D) 2and 2

C

9. In the following circuit, X is given by

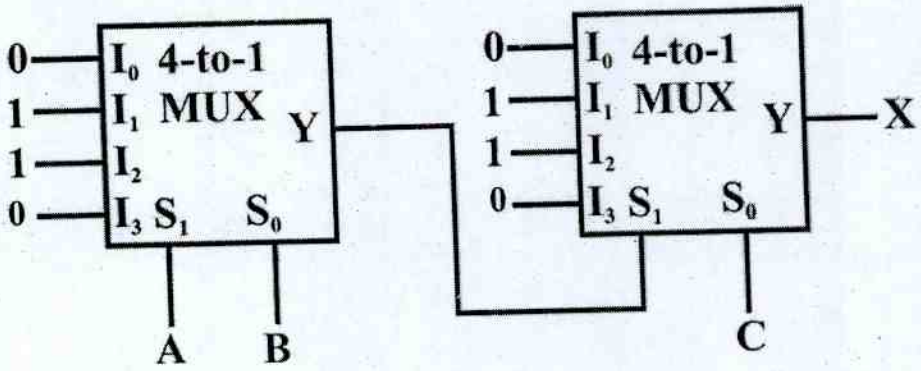

(A) X = $A\overline{B}\,\overline{C}+\overline{A}B\,\overline{C}+\overline{A}\,\overline{B}C+ABC$ (B) X = $\overline{A}BC+A\overline{B}C+AB\overline{C}+\overline{A}\,\overline{B}\,\overline{C}$

(C) X = A B + B C + A C (D) X = $\overline{A}\,\overline{B}+\overline{B}\,\overline{C}+\overline{A}\,\overline{C}$

A

10. How many 3-to-8 line decoders with an enable input are needed to construct a 6 – to-64 line decoder without using any other logic gates?
(a) 7 **(b) 8** **(c) 9** (d) 10

c

11. Consider the following logic circuit : What is the required input condition (A,B, C) to make the output X = 1, for the logic circuit ?

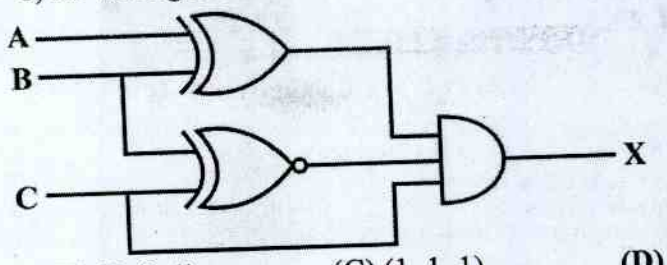

(A) (1, 0, 1) (B) (0, 0, 1) (C) (1, 1, 1) **(D) (0, 1, 1)**

D

12. Which one of the following logic operations is performed by the digital circuit shown above?

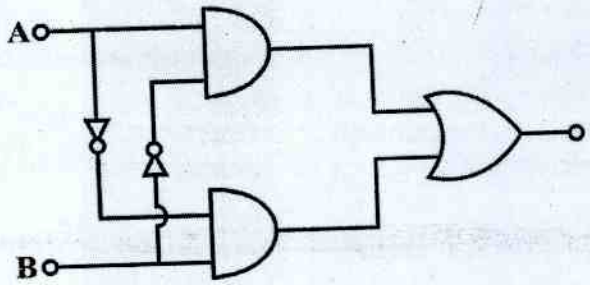

(A) NOR (B) NAND **(C) EX-OR** (D) OR

C

13. If 73_x (in base-x number system) is equal to 54_y (in base-y number system), the possible value of x and y are

(a) 8, 16 (b) 10, 12 (c) 9, 13 **(d) 8, 11**

D

14. The Boolean function $x`y` + xy + x`y$ is equivalent to

(a) x` + y` (b) x + y (c) x + y` **(d) x` + y**

D

15. 4-bit 2's complement representation of a decimal number is 1000. The number is

(A) +8 (B) 0 (C) -7 **(D) -8**

D

16. If the input to the digital circuit the figure, consisting of a cascade of 20 XOR gates is X, then the output Y is equal to

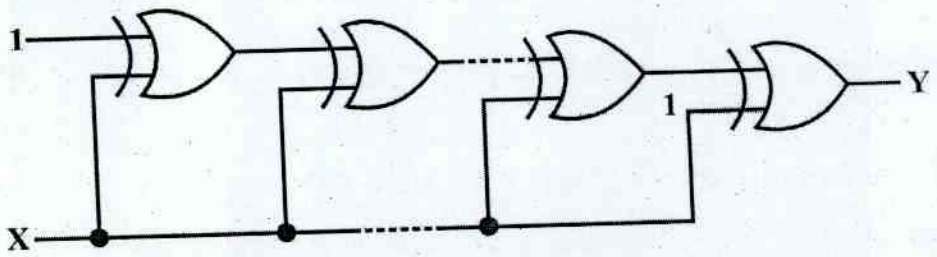

(A) 0 **(B) 1** (C) $\overline{X}$ (D) X

B

17. The number of distinct Boolean expressions of 4 variable is

(A) 16 (B) 256 (C) 1024 **(D) 65536**

D

18. If the functions W, X, Y and Z are as follows

$W = R + \overline{P}Q + \overline{R}S$

$X = PQ\overline{R}\,\overline{S} + \overline{P}\,\overline{Q}\,\overline{R}\,\overline{S} + P\overline{Q}\,\overline{R}\,\overline{S}$

$Y = RS + \overline{PR + P\overline{Q} + \overline{P}.\overline{Q}}$

$Z = R + S + \overline{PQ + \overline{P}.\overline{Q}.\overline{R} + P\overline{Q}.\overline{S}}$

Then

(A) $W = Z, X = \overline{Z}$ (B) $W = Z, X = Y$

(C) $W = Y$ (D) $W = Y = \overline{Z}$

A

19. 11001, 1001 and 111001 correspond to the 2's complement representation of which one of the following sets of number?

(A) 25, 9 and 57 respectively (B) -6, -6 and -6 respectively

(C) -7, -7 and -7 respectively (D) -25, -9 and -57 respectively

C

20. The number of product terms in the minimized sum–of–product expression obtained through the

K – map is (where, "d" denotes don't care states)

1	0	0	1
0	D	0	0
0	0	d	1
1	0	0	1

(A) 2 (B) 3 (C) 4 (D) 5

A

Result Analysis

DIGITAL
ELECTRONI
CS Unit-All
DATE:- 21
/ 09 / 2017

Sr No.	User Name	Total Questions	Correct Answer	Inorrect Answer	Unattempted	Total Marks	Negative Marks	Correct Marks	Score
1	Aman Chauhan	20	19	1	0	20	0.33	19	18.67
2	Himanshu Koley	20	18	1	1	20	0.33	18	17.67
3	Abhishek Jain	20	18	2	0	20	0.67	18	17.33
4	Divyanshi Gupta	20	17	2	1	20	0.67	17	16.33
5	Ratan	20	17	2	1	20	0.67	17	16.33
6	Ravi Kumar	20	17	2	1	20	0.67	17	16.33
7	Shree Ramji	20	17	2	1	20	0.67	17	16.33
8	Shailvi Maheshwari	20	17	3	0	20	1.00	17	16.00
9	Bhawani Singh	20	16	4	0	20	1.33	16	14.67
10	Tarang Tomar	20	16	4	0	20	1.33	16	14.67
11	Yashika Choudhary	20	15	3	2	20	1.00	15	14.00
12	Aishwarya Jain	20	15	4	1	20	1.33	15	13.67
13	Sanjay Kumar	20	15	4	1	20	1.33	15	13.67
14	Arindam Shishodia	20	15	5	0	20	1.67	15	13.33
15	Vikas Gupta	20	15	5	0	20	1.67	15	13.33
16	Lavi Arya	20	14	2	4	20	0.67	14	13.33
17	Rishabh	20	14	4	2	20	1.33	14	12.67
18	Suman Kumar	20	14	4	2	20	1.33	14	12.67
19	Simran Jain	20	14	6	0	20	2.00	14	12.00
20	Shivangi Gupta	20	13	4	3	20	1.33	13	11.67
21	Murtaza Ali	20	12	4	4	20	1.33	12	10.67
22	Prashant Singh Charan	20	13	7	0	20	2.33	13	10.67
23	Priyadarshi Vyas	20	13	7	0	20	2.33	13	10.67
24	Punit Gauttam	20	13	7	0	20	2.33	13	10.67
25	Rajan Kumar	20	13	7	0	20	2.33	13	10.67

56	Robin Kothari	20	4	8	8	20	2.67	4	1.33
57	Ranjeet Khorwal	20	4	8	8	20	2.67	4	1.33
58	Deepshri Phogawat	20	4	10	6	20	3.33	4	0.67
59	Aditya Sharma	20	5	13	2	20	4.33	5	0.67
60	Sandeep Choudhary	20	5	15	0	20	5.00	5	0.00
61	Deeksha Rani	20	3	10	7	20	3.33	3	-0.33
62	Rohit Dhaker	20	2	9	9	20	3.00	2	-1.00
63	Soubah Bhattchari ya	20	2	12	6	20	4.00	2	-2.00
64	Sandeep Kumar	20	3	16	1	20	5.33	3	-2.33

26	Vandana Chotiya	20	13	7	0	20	2.33	13	10.67
27	Aditya Saxena	20	11	3	6	20	1.00	11	10.00
28	Sudarsh Joshi	20	12	6	2	20	2.00	12	10.00
29	Sudhanshu Singh	20	11	4	5	20	1.33	11	9.67
30	Sharwan Kr Patel	20	11	4	5	20	1.33	11	9.67
31	Raju Kumar	20	12	8	0	20	2.67	12	9.33
32	Radhika	20	9	2	9	20	0.67	9	8.33
33	Gaurav Bansal	20	10	6	4	20	2.00	10	8.00
34	Abhishek Gupta	20	10	6	4	20	2.00	10	8.00
35	Gaurav	20	9	6	5	20	2.00	9	7.00
36	Saloni Kaushik	20	10	9	1	20	3.00	10	7.00
37	Vaishali Ambasta	20	9	6	5	20	2.00	9	7.00
38	Urvi Sharma	20	10	10	0	20	3.33	10	6.67
39	Raj Ankit Singh	20	10	10	0	20	3.33	10	6.67
40	Vijay Saini	20	10	10	0	20	3.33	10	6.67
41	Sanjeev Kr Purbey	20	9	7	4	20	2.33	9	6.67
42	Arpit Jain	20	7	4	9	20	1.33	7	5.67
43	Sanyam Maknawat	20	8	8	4	20	2.67	8	5.33
44	Nagesh Vaishnav	20	8	8	4	20	2.67	8	5.33
45	Priyal Garg	20	7	7	6	20	2.33	7	4.67
46	Lakshya Jain	20	8	10	2	20	3.33	8	4.67
47	Shikha	20	8	11	1	20	3.67	8	4.33
48	Udit Mundra	20	7	8	5	20	2.67	7	4.33
49	Sanjana Meena	20	7	8	5	20	2.67	7	4.33
50	Snehlata	20	6	6	8	20	2.00	6	4.00
51	Varun Bhatnagar	20	7	10	3	20	3.33	7	3.67
52	Sanjay Yadav	20	7	10	3	20	3.33	7	3.67
53	Harshita Gupta	20	6	8	6	20	2.67	6	3.33
54	Praveen Kachhawa	20	4	5	11	20	1.67	4	2.33
55	Alok Kumar	20	6	13	1	20	4.33	6	1.67

ECE Department

Report of GATE classes

Dated: 04/11/17

GATE classes are running according to planned schedule.
As this was the last week of teaching in 5th semester, syllabus of each subject has been covered .
A practice set of previous year GATE questions on topic **Frequency Modulation** and **Noise in AM and FM** in subject **Analog Communication** is discussed and solved in class for 5th semester students .The practice set is shown in **Annexure 1**

A unit test on unit 4 is conducted in subject TE (5EC3) and SS (5EC1) for Vth semester students. Test paper and result analysis is shown in **Annexure 2 and 3** .

Rahul

Rahul Pandey
Assistant Professor

S.K. Bhatnagar
7/11/17

ANNEXURE-1

Practice Set discussed in class'

SWAMI KESHVANAND INSTITUTE OF TECHNOLOGY, MANAGEMENT & GRAMOTHAN

DEPARTMENT OF ELECTRONICS AND COMMUNICATION ENGINEERING

Noise in AM and FM

Name of Faculty- Ravi Jangir **Class- V sem, Sec A**

Q. 1. Noise is introduced in the signal during

a. Modulation b. In channel c. Transmitter d. Receiver

Q 2. Figure of Merit is defined as

a. (SNR)o/ (SNR)i b (SNR)i/ (SNR)o c. Independent of SNR

Q 3. Figure of Merit in Synchronous Detector is

a. 1/3 b. less than 1 c. greater than 1 d. 1

Q 4. Figure of Merit in AM receiver is

a. 1/2 b. 1/3 c. 1 d. ¼

Q 5. Figure of Merit in FM is

a. $2/3\ B^2$ b. $1/2\ B^2$ c. $1/3\ B^2$ d. $3/2\ B^2$

Q6. Receiver having best performance in presence of noise is

a. Envelope Detector b. synchronous Detector c. NBFM d. WBFM

Q 7. Pre- emphasis is used

a. Before modulation b. after modulation c. After demodulation d. none of above

Q 8. De-Emphasis is used

a. Before modulation b. after modulation c. After demodulation d. none of above

Q 9. Noise input at demodulator

a. Only in High frequency b. only at low frequency c. Band limited d. present in all bands

Q 10. Channel noise is always

a. Subtractive b. multiplied c. divided d. additive

Q 11. Noise power is

a. Decreases with B.W.
b. Not changed with B.W.
c. Increases with B.W.
d. None of Above

Q 12. Use of Band-pass filter at receiver is

A. to decrease the signal power
b. to remove unwanted frequency components
c. to save power consumption
d. None of above

Q 13. Synchronous Detection is used in

a. AM b. FM c. AM- Supressed Carrier d. None of Above

Q 14. Using De-emphasis output SNR

a. Decreases b. Increases c. remains unchanged

Q 15. PSD of message signal

a. Increases at high frequency
b. Remains constant
c. decreases at high frequency
d. first increases than decrease

Q 16. PSD of Noise in FM demodulation

a. Increases at high frequency
b. Remains constant
c. decreases at high frequency
d. first increases than decrease

Q 17. Pre- Emphasis

a. Increases the amplitude of high frequency frequency
b. No change in the amplitude
c. Decreases the amplitude of high
d. none of above

Q 18. De- emphasis

a. Increases the amplitude of high frequency frequency
b. No change in the amplitude
c. Decreases the amplitude of high
d. none of above

Q 19. Synchronous Detection is affected by

a. Quadrature component of the noise
b. Resultant of noise
c. In phase component of the noise
d. Not affected by noise

Q 20. Power of message signal is defined as

a. $(Am)^4/2$ **b.** $(Am)/2$ c. $(Am)^2/3$ d. $(Am)^2/2$

Practice Set solved in class:

SWAMI KESHVANAND INSTITUTE OF TECHNOLOGY, MANAGEMENT & GRAMOTHAN

DEPARTMENT OF ELECTRONICS AND COMMUNICATION ENGINEERING

Frequency Modulation

Name of Faculty- Ravi Jangir **Class- V sem, Sec A**

1) Calculate the dissipation in power across 20Ω resistor for the FM signal v(t)= 20 cos(6600t+ 10sin2100t)

a. 5W **b.** 20W **c.** 10W **d.** 400W

2) FM signal is better than AM signal because FM signal is better than AM signal because

a. Less immune to noise **b.** Less adjacent channel interference
c. Amplitude limiters are used to avoid amplitude variations **d.** All of the above

3) A 100MHz carrier is frequency modulated by 10 KHz wave. For a frequency deviation of 50 KHz, calculate the modulation index of the FM signal.

a. 100 **b.** 50 **c.** 70 **d.** 90

4) For a FM signal v(t) = 25 cos (15 * 10^8t + 10 sin 1550t), calculate
Modulation index
Maximum frequency deviation

a. 10, 3000.1Hz **b.** 20, 1550.9Hz **c.** 10, 2465.9Hz **d.** 10, 2000.0Hz

5) FM is disadvantageous over AM signal because

a. much wider channel bandwidth is required
b. FM systems are more complex and costlier
c. Adjacent channel interference is more
d. Both a and b

6) Determine the Bandwidth of a FM wave when the maximum deviation allowed is 75KHz and the modulating signal has a frequency of 10KHz.

a. 170 KHz **b.** 200 KHz **c.** 100 KHz **d.** 1000 KHz

7) Wide band FM has the characteristics:
a. The frequency sensitivity k_f is large **b.** Bandwidth is wide
c. Both a and b 0**d.** None of the above
8) Narrow band FM has the characteristics:

a. The frequency sensitivity k_f is small **b.** Bandwidth is narrow
c. Both a and b **d.** None of the above

9) A 100MHz carrier is frequency modulated by 5 KHz wave. For a frequency deviation of 100 KHz, calculate the carrier swing of the FM signal.

a. 2000 KHz **b.** 100 KHz **c.** 105 KHz **d.** 200 KHz

10) For a FM signal $v(t) = 15 \cos (10 * 10^8 t + 10 \sin 1220t)$, calculate

1. Carrier frequency
2. Modulating frequency

a. 159.1MHz, 194.1Hz
b. 185.5MHz, 200.15Hz
c. 350.1MHz, 200.1Hz
d. 159.1Hz, 194.1Hz

11) Guard bands are provided in FM signal to

a. Prevent interference from adjacent channels
b. To increase the noise
c. To increase bandwidth
d. None of the above

12) Maximum frequency deviation and the maximum bandwidth allowed for commercial FM broadcast is

a. 80KHz, 160Khz
b. 75KHz, 200Khz
c. 60KHz, 170Khz
d. 75KHz, 250Khz

13) In frequency modulation,

a. Armstrong method is used for generation
b. Multiple side bands are generated
c. The FM signal has infinite bandwidth
d. All of the above

14) After passing the FM signal through mixer, what is the change in the frequency deviation Δ when the modulating frequency is doubled?

a. Becomes 2Δ
b. Becomes $\Delta/2$
c. Becomes Δ^2
d. Remains unchanged

15) Calculate the modulation index in an FM signal when f_m (modulating frequency) is 250Hz and Δf (frequency deviation) is 5KHz.

a. 20
b. 35
c. 50
d. 75

16) What is the value of carrier frequency in the following equation for the FM signal? $v(t)= 5 \cos(6600t+ 12\sin 2500t)$

a. 1150 Hz
b. 6600 Hz
c. 2500 Hz
d. 1050 Hz

17) The equation $v(t) = A \cos [\omega_c t + k_p \Phi(t)]$ represents the signal as

a. Phase modulated signal
b. SSBSC signal
c. DSB SC signal
d. None of the above

18) Carson's rule is used to calculate

a. Bandwidth of FM signal
b. Signal to noise ratio
c. Modulation index
d. Noise figure

19) The increase or decrease in the frequency around the carrier frequency is termed as

a. Figure factor
b. Frequency deviation
c. Modulation index
d. Frequency spectrum

20) Phase-locked loop can be used as

a. FM demodulator
b. AM demodulator
c. FM receiver
d. AM receiver

ANNEXURE - 2

TEST-III

VECE A

Sub-TE **Session-2017-18**

Max Marks → 20

Cross talk is

A. The disturbance caused in the nearby channel or circuit due to transmitted signal
B. Adjacent frequency rejection
C. Generation of closely lying side bands
D. None of the above

Unit that is used to express state of a signal is

A. Kilograms
B. Seconds
C. Decibel
D. Hertz

Term that refers to loss of strength of a signal is called

A. attenuation
B. distortion
C. Noise
D. Impairments

Synchronous Time-Division Multiplexing (TDM) is not efficient because of

A. higher data rate
B. infinite frames
C. empty slots
D. Both A and C

Multiplexing technique, in which each input connection has an allotment in output even if it is not sending data is

A. Asynchronous TDM
B. Synchronous TDM
C. FDM
D. WDM

In multiplexing, channels are separated by unused strips of bandwidth guard bands - to prevent

A. Synchronization
B. Overlapping
C. random motion of electrons
D. Both B & C

Techniques for efficient utilization of bandwidth includes

A. Multiplexing
B. medium linking
C. Sampling
D. Both A &C

Time-division multiplexing is designed for

A. digital signals
B. analog signals
C. both a and b
D. None

Which multiplexing technique transmits digital signals ?

A. FDM
B. TDM
C. WDM
D. None of the mentioned

Multiplexing can provide

A. Efficiency
B. Privacy
C. Anti jamming
D. Both a and b

In TDM, slots are further divided into

A. Seconds
B. Frames
C. Packets
D. None of the mentioned

Multiplexing technique that shifts each signal to a different carrier frequency

A. FDM
B. TDM
C. Either a or b
D. Both a and b

Reflection of sound is called

A. quality
B. loudness
C. pitch
D. echo

Echoes maybe heard more than once due to

A. multiple reflections
B. single time reflection
C. refraction
D. diffraction of waves

Twisted pair cable consists of

A. none
B. 1 conductor
C. 2 conductors
D. n conductors

Half duplex system for communication has

A. Communication in single direction
B. Communication in single direction at a time
C. Communication in both directions at the same time
D. None of the above

Trunking in a cellular network refers to

A. Termination of a call
B. Spectrum unavailability
C. Accommodating large number of users in limited spectrum
D. All of the above

Grade of service refers to

A. Accommodating large number of users in limited spectrum
B. Ability of a user to access trunked system during busy hour
C. Two calls in progress in nearby mobile stations
D. High speed users with large coverage area

Traffic intensity is expressed in

A. Erlangs /MHz /km^2
B. Erlangs
C. λ/ sec
D. dB/sec

EPABX stands for-

A. ELECTRONIC PRIVATE AUTOMATIC BRANCH EXCHANGE
B. ELECTRONIC PUBLIC AUTOMATIC BRANCH EXCHANGE
C. ELECTRONIC AUTOMATIC PRIVATE BATCH EXCHANGE
D. NONE OF THESE

EC- V sem Telecommunication Engineering Unit-III **Date;- 04/11/17**

S. No.	Student Name	Total Questions	Correct Answer	Inorrect Answer	Total Marks	Negative Marks	Score
1	Aman Chauhan	20	19	1	20	0.33	18.67
2	Arindam Shishodia	20	18	2	20	0.67	17.33
3	Gaurav	20	18	2	20	0.67	17.33
4	Shree Ramji	20	17	2	20	0.67	16.33
5	Aishwarya Jain	20	17	3	20	1.00	16.00
6	Rohit Dhaker	20	17	3	20	1.00	16.00
7	Sudarsh Joshi	20	17	3	20	1.00	16.00
8	Varun Bhatnagar	20	16	3	20	1.00	15.00
9	Aman Chauhan	20	16	4	20	1.33	14.67
10	Murtaza Ali	20	16	4	20	1.33	14.67
11	Prashant Singh Charan	20	16	4	20	1.33	14.67
12	Robin Kothari	20	15	5	20	1.67	13.33
13	Himanshu Koley	20	15	5	20	1.67	13.33
14	Sanjay Kumar	20	15	5	20	1.67	13.33
15	Divyanshi Gupta	20	14	5	20	1.67	12.33
16	Ravi Kumar	20	14	5	20	1.67	12.33
17	Snehlata	20	14	5	20	1.67	12.33
18	Bhawani Singh	20	14	6	20	2.00	12.00
19	Gaurav Bansal	20	14	6	20	2.00	12.00
20	Sudhanshu Singh	20	13	3	20	1.00	12.00
21	Sanyam Maknawat	20	13	5	20	1.67	11.33
22	Abhishek Jain	20	13	7	20	2.33	10.67
23	Lovely Raj	20	13	7	20	2.33	10.67
24	Raj Ankit Singh	20	13	7	20	2.33	10.67
25	Rishabh	20	12	6	20	2.00	10.00
26	Shailvi Maheshwari	20	12	7	20	2.33	9.67
27	Arpit Jain	20	12	8	20	2.67	9.33
28	Gaurav Koolwal	20	12	8	20	2.67	9.33
29	Shikha	20	11	5	20	1.67	9.33
30	Udit Mundra	20	11	7	20	2.33	8.67
31	Priyadarshi Vyas	20	11	7	20	2.33	8.67
32	Aditya Saxena	20	11	8	20	2.67	8.33
33	Priyadarshi Pratap Singh	20	11	8	20	2.67	8.33
34	Radhika	20	10	6	20	2.00	8.00
35	Vaishali Ambasta	20	10	8	20	2.67	7.33
36	Ratan	20	10	9	20	3.00	7.00
37	Punit Gauttam	20	10	10	20	3.33	6.67
38	Deeksha Rani	20	9	8	20	2.67	6.33
39	Divya Saini	20	9	10	20	3.33	5.67
40	Sanjana Meena	20	8	7	20	2.33	5.67
41	Priyal Garg	20	7	8	20	2.67	4.33
42	Himanshi Jain	20	5	12	20	4.00	1.00